ASHLAND, KENTUCKY ZONING ORDINANCE

As amended through JULY 2026

BLANK PAGE

CONTENTS

I. GENERAL REGULATIONS

1.	Title and Purpose	7
2.	Short Title	7
3.	Relationship to Other Laws	7
4.	Administrative Standards	7
5.	Application of this Ordinance	7
6.	Establishment of Zoning Districts	8
7.	Establishment of Districts in Annexed Areas	10
8.	Zoning District Boundaries	10
9.	Interpretation of District Boundaries	11
10.	Amendment of District Boundaries	11

II. SUPPLEMENTARY DISTRICT REGULATIONS

1.	Compatibility Standards for Single-Family Dwellings	13
2.	General Yard Regulations	14
3.	Front Yard Regulations	14
4.	Side Yard Regulations	14
5.	Front or Street Side Yards in Non-Residential Districts	15
6.	Intersection Visibility	15
7.	Accessory Structures and Uses (Residential)	17
8.	Accessory Structures and Uses (Non-Residential)	18
9.	Keeping of Animals, Agricultural Uses	19
10.	Manufactured Units as Temporary Construction Offices	19
11.	Manufactured Units as Temporary Non-Residential Structures (Not Related to Construction)	19
12.	Townhouse Dwelling Units	20
13.	Zero Lot Line Units	20
14.	Height Regulations	21
15.	Outdoor Storage	21
16.	Outdoor Illumination of Uses	21
17.	Flood Plain Development	22
18.	Right-of-Way Development	22
19.	Mixed Use Development	22
20.	Home Occupations	22

III. NONCONFORMING SITUATIONS

1.	Purpose and Intent	23
2.	Nonconforming Lots of Record	23
3.	Extension or Enlargement of Nonconforming Situations	23
4.	Abandonment and Discontinuance of Nonconforming Situations	24
5.	Change in Kind of Nonconforming Use	25
6.	Completion of Nonconforming Project	25
7.	Nonconforming Signs	25
8.	Nonconformity Permit	25

IV. LANDSCAPING AND BUFFER REQUIREMENTS
1. Purpose 27
2. General Requirements 27
3. Screening and Buffer Requirements 27
4. Landscaping Requirements: Vehicular Use Areas 28
5. Plan Review and Approval 30
6. Site Distance Requirements: Driveways and Street Intersections 31
7. Installation and Maintenance 31

V. OFF-STREET PARKING REQUIREMENTS
1. Purpose 33
2. General Requirements 33
3. Location of Off-Street Parking Space 34
4. Interpretation and Modification 34
5. Design Standards 35
6. Schedule of Off-Street Parking Requirements 36

VI. OFF-STREET LOADING REQUIREMENTS
1. Purpose 39
2. General Requirements 39
3. Location of Off-Street Loading Space 39
4. Interpretation and Modification 39
5. Design Standards 40
6. Schedule of Off-Street Loading Requirement 41

VII. SOIL EROSION AND SEDIMENT CONTROL
1. Purpose and Findings 43
2. Applicability 43
3. Requirements 44

VIII. SITE PLAN REGULATIONS
1. Purpose 45
2. Applicability 45
3. Requirements 45
4. Scope of Review 46
5. Action by Zoning Administrator 46

IX. CELLULAR ANTENNA TOWER AND SMALL CELL TOWER REGULATIONS
1. Purpose 47
2. General 47
3. Applicability 47
4. Definitions 47
5. Regulations for Cellular Antenna Towers 49
6. Regulations for Small Cell Towers and Facilities 53
7. Small Cell Wireless Facility and Small Cell Tower Location and Design Regulations 55
8. Confidentiality of Applications 58

X. ADMINISTRATION AND ENFORCEMENT
1. Zoning Enforcement 59
2. Relation to Other Permits, Certificates and Licenses 59
3. Enforcement 59

XI. BOARD OF ZONING ADJUSTMENT
1. Establishment 61
2. Powers, Duties and Rules of the Board 61
3. Members' Liability 61
4. Appeals 61
5. Administrative Review 62
6. Conditional Use Permits 62
7. Variances 62
8. Nonconformity Permits 63
9. Appeals from the Board of Zoning Adjustment 63
10. Recording of Conditional Use Permits, Variances 63

XII. AMENDMENT PROCEDURES
1. Changes and Amendments 65
2. Action by the Applicant 65
3. Action by the Planning Commission 65
4. Action by the City Commission 66
5. Reasons for Amendment 66
6. Withdrawal of Petition 66
7. Reconsideration of Petition 66
8. Effect of Amendment Petition on Building Permits 67

XIII. CONDITIONAL USES
1. Objective and Purpose 69
2. Procedure for Approval of Conditional Use Permits 69
3. Regulations of Conditional Use Permits 70
a. Adult Uses 71
b. Animal / Pet Boarding, Kennel 71
c. Art Gallery, Museum 72
d. Bed and Breakfast Facility 72
e. Beekeeping Operations 73
f. Cemetery 74
g. Data Centers 75
h. Day Care Center, Nursery 86
i. Duplex and Multi-Family Dwelling 86
j. Dwelling, Multi-Family, Large Scale 87
k. Dwelling, Townhouse 88
l. Emergency Services 89
m. Flammable or Hazardous Chemicals: Bulk Storage Above Ground 89
n. Flammable or Hazardous Chemicals: Bulk Storage Below Ground 90
o. Fortunetelling 91
p. Group Care Home 91

q. Indoor Gun Range 93
r. Industrial Operations (Not Specifically Listed in the Table of Permitted Uses) 93
s. Keeping of animals, non-household 94
t. Mobile Home Parks 95
u. Natural Resources Extraction 97
v. Nursing Homes 98
w. Public Utility Substation/Stations 99
x. Recreation Facilities: Public and Non-Profit 100
y. Recreation Facilities: For Profit 100
z. Temporary Uses (Not Otherwise Addressed by Other Provisions) 101
aa. Professional Services use of Historic Structures 103
bb. Warehousing, Mini-Storage 104

XIV. DISTRICT REGULATIONS
1. R-12 - Residential/Low Density 105
2. R-6 - Residential/Medium Density 105
3. R-5 - Residential/Medium Density 106
4. R-4 - Residential/High Density 107
5. P-H - Public/Hospital 107
6. B-1 - Neighborhood Business 108
7. B-2 - General Business 109
8. B-3 - Downtown 110
9. I-1 - Light Industrial 110
10. I-2 - Heavy Industrial 111
11. Planned Unit Development (PUD) 112
12. R-E - Residential Estate 117
13. Table of Permitted and Conditional Uses 118
14. Table of Dimensional Requirements 127

XV. DEFINITIONS 129

XVI. APPENDIX – Zoning Ordinance Amendments 150

ADDENDUM – Ordinance 21, 2012 – Sign Regulations 152

ARTICLE I
GENERAL REGULATIONS

I.1 Title and Purpose

An ordinance to establish zoning districts and regulations governing the development and use of land within the City of Ashland, and providing for the administration, enforcement and amendment thereof, in accordance with the provisions of Kentucky Revised Statutes, Chapter 100 and the Comprehensive Plan of the City of Ashland.

I.2 Short Title

This ordinance may be commonly known as and referred to as the City of Ashland, Kentucky Zoning Ordinance of 1986.

I.3 Relationship to Other Laws

Whenever regulations or restrictions imposed by this ordinance are either more or less restrictive than regulations or restrictions imposed by any governmental authority through legislation, rule or regulations, those rules or restrictions which are more restrictive or which impose higher standards or requirements shall govern.

I.4 Administrative Standards

In the administration of this Ordinance, when it is necessary or desirable to make any administrative decision, then, unless other standards are provided in this ordinance, the decision shall be made in harmony with the spirit and purpose of this ordinance, and not injurious to the surrounding neighborhood.

I.5 Application of this Ordinance

The regulations set by this ordinance within each district shall be held to be minimum regulations and shall apply uniformly to each class or kind of structure or land, and particularly the following:

a. No building, structure, or land shall be used or occupied, and no building or structure or part thereof shall hereafter be erected, altered, or moved except in conformity applicable regulations herein specified for the district in which it is located.

b. Off-street parking or loading space required in connection with any structure and/or use for the purpose of complying with this ordinance shall not be part of off-street parking or loading space similarly required for any other building/use unless specifically permitted.

c. No yard or zoning lot existing on the effective date of this ordinance shall be reduced in dimension or area below the minimum requirements set forth herein, unless such yard or zoning lot is reduced by governmental acquisition for a public purpose. Yards or zoning lots created after the effective date of this ordinance shall meet at least the minimum requirements established by this Ordinance.

d. Every principal single family residential building hereafter erected, altered, or moved shall have provided and continuously maintained for it a zoning lot as herein defined. In no case shall there be more than one (1) single family building and its permissible accessory structures on a single zoning lot, except as specifically authorized by other provisions of this Ordinance.

e. No principal building, structure, or land use may occupy a zoning lot unless the zoning lot fronts on a public street, except as specifically authorized by other provisions of this Ordinance.

I.6 Establishment of Zoning Districts

The City of Ashland is hereby divided into the following zoning districts with the designations and purposes listed below.

The districts included in this Ordinance are adopted for the promotion and protection of the public health, safety, morals and/or general welfare. The purpose of each district is to provide specific regulations for use of land and control of other land development features such as lot size, lot width and yards, maximum lot coverage, and height of structures. The purpose of each district is further defined as follows.

a. R-12 Residential / Low Density
These districts are composed primarily of areas occupied by or suitable for one-family dwellings on large lots, resulting in low density development. The district regulations are designed to protect the residential character of the districts by prohibiting commercial activities, and to encourage a suitable environment for family life.

b. R-6 Residential / Medium Density
These districts are composed primarily of areas occupied by or suitable for one-family dwellings at a medium density. The district regulations are designed to protect the residential character of the districts by limiting commercial activities, and to encourage a suitable environment for family life.

c. R-5 Residential / Medium Density
These districts are composed primarily of areas occupied by or suitable for either one-family or a mixture of one-family, two-family and multi-family dwellings in a medium density range. The district regulations are designed to encourage the construction of mixed single and multi-family units, and to protect the residential character of the areas by limiting commercial activities, to encourage a suitable environment for family life, to prevent overcrowding of the land by requiring certain minimum yard and other open spaces for all buildings, to avoid excessive population density by requiring a certain minimum building site area for each dwelling unit, and to protect the abutting and surrounding areas by requiring certain minimum yard and area standards.

d. R-4 Residential / High Density
These districts are composed mainly of areas occupied by or suitable for high density multi-family uses located in proximity to business, service or employment centers. These districts may also contain public and semi-public uses to support high density residential

development. The district regulations are designed to encourage and protect the high density residential character of the districts by limiting the permitted uses primarily to dwellings and requiring certain minimum yard and area standards.

e. B-1 Business / Neighborhood

These districts are composed of land and structures occupied by or suitable for uses supplying retail goods and services to surrounding residential neighborhoods. Often located on a thoroughfare or near the intersection of two thoroughfares, these districts are small and conveniently located for the areas they serve. The district regulations are designed to permit the controlled development, of the districts to protect the abutting and surrounding residential areas.

f. B-2 Business / General

These districts are composed of land and structures occupied by or suitable for uses supplying a wide range of retail goods and services. Usually located on a thoroughfare or highway or near the intersection of principal thoroughfares or highways, these districts are relatively large and within convenient distance of the area they serve. The district regulations are designed to allow commercial development while protecting the abutting and surrounding residential areas.

g. B-3 Business / Downtown

These districts are composed of land and structures occupied by or suitable for uses furnishing the wide range of retail goods and services required by residents of the regional trade area. Located at the convergence of the principal thoroughfares and highways, the downtown is the focus of commerce and administrative business of the trade area. The district regulations are designed to permit further development of the district for its purpose in a compact and convenient arrangement of uses and structures that are urban in character.

h. I-1 Industrial / Light

These districts are composed of land and structures occupied by or suitable for light manufacturing, wholesaling, warehousing, and similar uses. Uses located in these districts should have minimum negative environmental impact (including, but not limited to noise, glare, and vibration) on adjoining properties. Located for convenient access to present and future thoroughfares, highways and railway lines, these districts are usually separated from residential areas by business districts or by natural barriers; if they are adjacent to residential areas, an artificial or natural separation is required. The district regulations are designed to allow a range of light industrial activities subject to limitations designed to protect nearby residential and business districts.

i. I-2 Industrial / Heavy

These districts are composed of land and structures occupied by or suitable for heavy manufacturing and related activities. Located for convenient access to present and future arterial thoroughfares, highways, and railway lines, these districts are usually separated from residential areas by business districts or natural barriers; if they are adjacent to residential areas, an artificial or natural separation is required. The district regulations are designed to promote the development of the districts for industrial use subject to conditions necessary for the mutual benefit of the uses and the city.

j. P-H Public / Hospital

These districts are designed to support the unique development needs associated with large scale health care institutions. Hospitals and related medical service offices, support commercial uses, and accessory parking facilities are compatible uses in these districts. When these districts adjoin residential areas, provisions are included to preserve the privacy and uses of dwelling units.

k. R-E Residential Estate

These districts are composed of land and structures occupied by or suitable for one family dwellings on very large lots. The regulations are designed to accommodate residential development opportunities for those who desire low density estate living n more urban development; and who are willing to assume the costs of providing many of their own services and amenities. The regulations further are designed to minimize disruption to natural features such a steep slopes and unstable soils; and to protect the estate character of the district by prohibiting commercial uses and heavy traffic generators.

I.7 Establishment of Districts in Annexed Areas

Whereby reason of annexation the area included in the City of Ashland is increased, that new part of the City shall be classified as R-12 Residential / Low Density on the effective date of the annexation. From the effective date of such annexation, the Planning Commission shall have forty-five (45) days to conduct a zoning study of such area and recommend a zoning map amendment to the City Commission. After the City Commission has acted upon such recommendation, or absent a Planning Commission recommendation within said forty-five (45) day period, any property owner may request a zoning map amendment in an annexed area. No other zoning map amendment requests shall be processed during this forty-five (45) day period in an annexed area.

I.8 Zoning District Boundaries

a. The location and boundaries of the zoning districts shall be as shown on the map accompanying this Ordinance and made a part hereof, entitled "Zoning Map of the City of Ashland." The Zoning Map and the authorized notations, references and amendments thereto, and other information shown thereon, are hereby made a part of this Ordinance. The Zoning Map, properly attested by the signatures of the Mayor and City Clerk with the seal of the municipality affixed, shall be kept on file in the office of the City Clerk and shall be available for inspection by the public.

b. The provisions of this Ordinance governing within each type of district the use of land and buildings, dimensional requirements, and other matters as are hereinafter set forth, are hereby established and declared to be in effect upon all land included within the boundaries of each and every district as shown upon said map, including water areas and rights-of-ways.

c. In the creation of the respective districts, consideration was given to the existing character of each district and its peculiar suitability for particular future uses, and with a view to enhance the value of property interests and encouraging the most appropriate and beneficial use of land throughout the City.

I.9 Interpretation of District Boundaries

Where uncertainty exists as to the boundaries of districts as shown on the Zoning Map, the following rules shall apply:

a. Boundaries indicated as approximately following lot lines shall be construed to be such lot lines.

b. Boundaries indicated as approximately following streets, alleys, or other transportation rights-of-way shall be construed to be midway between the rights-of-way lines.

c. Boundaries indicated as approximately following the city limits shall be construed as following such city limits.

d. Boundaries indicated as following railroad lines shall be construed to be the centerline of the railroad right-of-way.

e. Boundaries indicated as following shore lines shall be construed to follow such shore lines, and in the event of change in the shore lines, it shall be construed as moving with the actual shore lines.

f. Boundaries indicated as following the centerlines of streams, rivers, canals, lakes, or other bodies of water shall be construed to follow such centerlines.

g. In unsubdivided property or where a district boundary divides a lot, the location of such boundary, unless the same is indicated by dimensions, shall be determined by use of the scale appearing on the map.

h. Where any street, road or alley is hereafter officially vacated or abandoned, the regulations applicable to each parcel of abutting property shall apply to the portion of such street, road or alley added to the property by virtue of such vacation or abandonment.

i. Boundaries indicated as parallel to or extensions of features indicated in Subsections I.9 (a-f) above, shall be so construed.

j. If an area is not shown on the Official Zoning Map as being included in any district, it shall be deemed to be in the R-12 Residential / Low Density District.

k. In case any further uncertainty exists, the Board of Zoning Adjustment shall interpret the intent of the map as to location of district boundaries.

I.10 Amendment of District Boundaries

If, in accordance with the provisions of KRS Chapter 100 and of this Ordinance, changes are made in district boundaries or other matters portrayed on the Zoning Map, the following rules shall apply:

a. Such changes shall be entered on the Zoning Map promptly after the amendment has been approved by the City Commission, together with a reference to a more complete descriptive record of such changes which shall be kept as a permanent record in the office of the City Clerk.

b. Entries on the Zoning Map shall be noted by index number. The number shall appear again on the map in a space provided, that correctly specifies the zoning case number and the date the change was approved.

c. No changes of any nature shall be made on the Official Zoning Map, or matter shown thereon, except in conformity with the procedures set forth in this Ordinance. Any unauthorized change of whatever kind by any person or persons shall be considered a violation of this Ordinance.

d. Zoning Map amendments shall comply with the provisions of Article XII.

ARTICLE II
SUPPLEMENTARY DISTRICT REGULATIONS

II.1 Compatibility Standards for Single-Family Dwellings

All single-family detached dwellings on individual lots in residential districts, outside of Mobile Home Parks, shall conform to these standards. Structures that fail to meet the following standards shall require approval from the Board of Zoning Adjustment prior to the issuance of a building permit.

a. Foundation. The dwelling shall be set on a permanent perimeter foundation that forms a complete enclosure under the exterior walls. If the structure is not designed to be supported by a perimeter foundation, a wall constructed of brick, stone or concrete block shall be installed to give the appearance of a permanent foundation.

b. Installation. The dwelling shall be properly connected to utilities and, if manufactured off-site, shall be installed on site in accordance with the manufacturer's specifications.

c. Roof. The roof pitch shall not be less than a 4:12 ration except over porches, garages, and carports. The roofing material shall be of a type or shall resemble a type commonly found on site-built dwellings.

d. Exterior walls. The exterior covering of the dwelling unit shall be similar in appearance to materials commonly found on site-built dwellings. It shall not reflect light to any greater degree than siding coated with white gloss exterior enamel paint.

e. Faces Street. The dwelling shall be oriented on the lot or parcel so that its main entrance door faces the street.

f. Minimum width. The narrowest portion of the main part of the dwelling shall be no less than twenty (20) feet in width.

g. Minimum total living area. The minimum total living varies by zoning district and shall be as follows:

R-4 – 900 sq ft	R-12 – 2,000 sq ft
R-5 – 900 sq ft	R-E – 3,500 sq ft
R-6 – 1,500 sq ft	

h. The minimum width and minimum total living area may be waived if:
1. The setback requirements or lot dimension would not reasonably accommodate a home meeting this minimum requirement; and
2. The home is the maximum width and square footage that could reasonably fit on the lot while complying with all applicable setback requirements and other zoning regulations.
3. In areas where Tiny Homes are permitted.

II.2 General Yard Regulations

Every part of a required yard shall remain open, with the following exceptions:

a. Sills, belt courses, buttresses, chimneys, ornamental features, and eaves, but not porches, may project into a required side yard not more than twelve (12) inches, and into a required front or rear yard not more than four (4) feet. A four (4) foot side yard shall be maintained beyond the projection.

b. Open or enclosed fire escapes, fireproof outside stairways, and balconies may project into a required yard not more than four (4) feet. A four (4) foot side yard shall be maintained beyond the projection.

c. Unenclosed carports which are attached to a dwelling may extend to within four (4) feet of any side property line (not a corner lot line). This distance shall be measured from the furthest projection of the carport to the lot line.

d. Eaves and awnings attached to existing structures for solar energy and / or protection, may extend into a required yard not more than four (4) feet. A four (4) foot side yard shall be maintained beyond the projection.

e. Accessory structures and uses may in certain instances be located in required yards. See Sections II.6 and II.7.

II.3 Front Yard Regulations

The following regulations shall apply in all districts:

a. Where lots comprising forty percent (40%) or more of the frontage in any block face are already developed with buildings whose front yards are less than the minimum required front yard as specified in this Ordinance, the required front yard may be reduced so that a structure may be erected, reconstructed, altered or moved so as to project to the average front building line established by adjacent existing buildings. This provision likewise applies to side yards on corner lots, except that the intersection visibility requirements of Section II.5 shall be met.

b. The front yard requirements as specified in the Table of Dimensional Requirements (Section XIV.14) shall apply to each street frontage of a through lot, and each shall be considered a front yard.

c. The front yard requirements as specified in the Table of Dimensional Requirements (Section XIV.14) shall apply to each street frontage of a corner lot, and each shall be considered a front yard.

II.4 Side Yard Regulations

If a structure is not required to provide a side yard by this Ordinance, but is not placed on

the side lot line, then the side yard provided shall not be less than four (4) feet.

II.5 Front or Street Side Yards in Non-Residential Districts

Unless a front yard of a greater depth is required for a non-residential zoning district, any lot in a non-residential district that abuts a residential zoning district shall have a front yard setback at least equal to the requirements of the abutting residential district, for the entire width of the non-residential zoning lot or two hundred (200) feet (whichever is less).

II.6 Intersection Visibility

To ensure that structures, signs, and landscaping do not constitute a driving and pedestrian hazard, a "sight triangle" shall be observed at all street intersections, and all intersection of streets with railroad tracks. Within the sight triangle, no obstruction of any kind shall be permitted between a height of two (2) feet and eight (8) feet above the mean elevation of the street. The B-3 Business/Downtown district shall be exempt from these requirements because of large scale development, low traffic speeds, and adequate traffic controls.

The sight triangle shall consist of the following; or other dimensions having a similar effect when intersections are not ninety degrees (90°).

a. Intersecting streets shall have a sight triangle with two sides being fifteen (15) feet along the abutting rights-of-way lines, measured from their point of intersection, and the third side being a line connecting the ends of the other two lines.

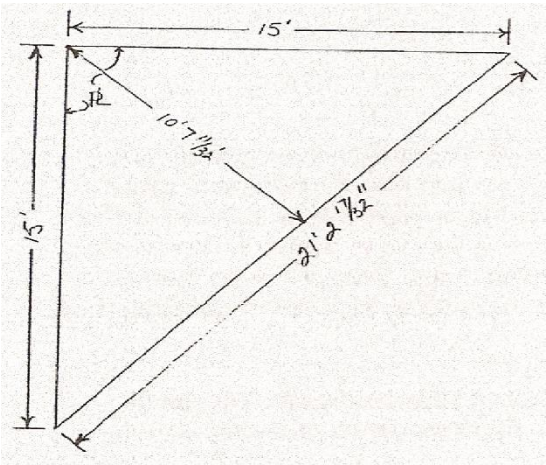

b. A street intersecting a railroad track shall have sight triangle with two sides being twenty-five (25) feet along the abutting rights-of-way lines, from their point of intersection, and the third side being a line connecting the other two lines.

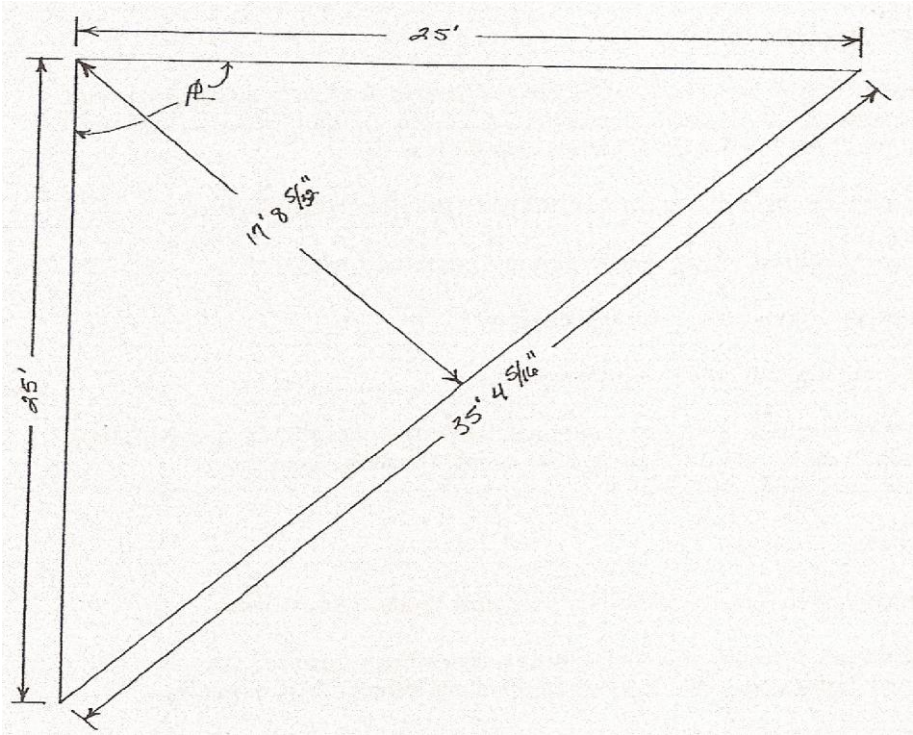

c. A street intersecting a driveway shall have a sight triangle with one side being fifteen (15) feet along the right-of-way edge, one side being ten (10) feet along the abutting driveway pavement, and the third side being a line connecting the other two lines. Driveways to single and two-family homes are exempt from this provision.

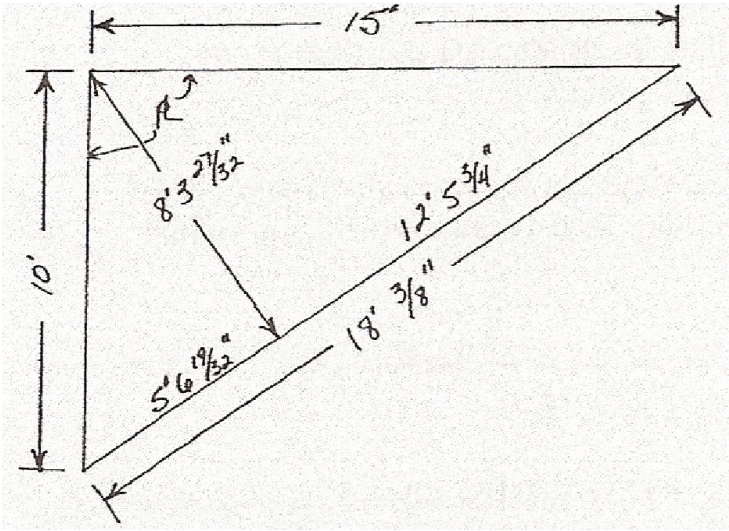

II.7 Accessory Structures and Uses (Residential)

a. Accessory structures and uses are permitted in any residential district in connection with any use which is permitted. Accessory structures and uses, as defined in Article XV of this Ordinance, shall include but not be limited to, the following:

1. A private garage or carport when not attached to the principal structure.

2. A structure for enclosed storage incidental to a permitted use.

3. Satellite antennae and alternate energy devices.

4. A private swimming pool and / or bath house.

5. Statuary, arbors, trellises, awnings, canopies, barbeque equipment, gazebos, flag poles, non-mechanical laundry drying equipment, terraces, recreational equipment, fences, walls and hedges.

6. Fallout Shelters.

7. Outdoor parking of trailers, recreational vehicles, boats, and campers.

8. Personal passenger vehicles and their storage are exempt from residential accessory use regulations. Inoperative vehicles are subject to II.6.b below.

9. Within the R-E district only, accessory uses may also include secondary dwelling units (guest house, caretaker's quarters), for the convenience and necessity of the principal residential use.

b. In all residential districts, detached accessory structures and uses are prohibited in required front yards, but may be located in a required rear and side yard subject to the following provisions.

1. No accessory structure or use shall be located closer than ten (10) feet to any principal building, except II.6.a.5., and II.6.a.7., above.

2. On through and corner lots, no accessory building or use shall extend beyond the front yard setback required on the street frontage to the rear/side of the principal structure, except II.6.a.5., above.

3. No part of an accessory structure or use shall extend to within four (4) feet of any side or rear property line, except fences, walls, and vegetation.

4. No fence, wall or hedge that obstructs sight shall be erected, altered, or placed in any required front yard to exceed a height of four (4) feet above grade.

c. Outdoor storage of interior household furnishings or washing machines, refrigerators, and non-household items is not allowed in residential areas unless specifically permitted by the Schedule of District Regulations or by the Board of Adjustment as a Conditional Use.

d. Signs, a special type of accessory use, shall be permitted as specified in Ordinance 21, 2012.

e. Outdoor storage of trucks and/or trailers larger than two (2) ton capacity is prohibited in residential zoning districts.

II.8 Accessory Structures and Uses (Non-Residential)

a. Accessory structures and uses are permitted for any non-residential permitted principal use (as of right or conditionally). Accessory structures and uses, as defined in Article XV of this Ordinance, shall include, but not be limited to, the following, unless specifically prohibited in the Schedule of District Regulations or the Board of Zoning Adjustment in the case of Conditional Uses:

1. Outdoor storage, when specifically permitted as a right or conditionally. (See Section II.14)

2. Canopies, free standing or attached, for weather protection.

3. Service station islands.

4. Outdoor parking of trucks, buses, and other large vehicles.

5. One dwelling unit for each non-residential zoning lot, constructed as an integral part of the principal non-residential structure, for proprietor or employee occupancy.

b. For all non-residential uses, accessory structures and uses shall be excluded from required front yards, but may be located in the required rear or side yard, provided the landscaping and buffer provisions of Article IV are met.

c. Off-street parking and paved service areas may be located in any required yard of a non-residential district lot, provided that the landscaping and buffer requirements of Article IV are met.

d. Signs a special type of accessory use, shall be permitted as specified in Ordinance 21, 2012.

II.9 Keeping of Animals, Agricultural Uses

a. No animals other than household pets shall be permitted in any zoning district unless specifically permitted.

b. Where agricultural uses are permitted by this Ordinance, such activity is exempt from building permits or certificates of occupancy, and dimensional requirements, in accordance with KRS Chapter 100.203(4). Street setback lines and flood plain regulations shall be observed. See Article XV for the definition of "Agricultural Use."

II.10 Manufactured Units as Temporary Construction Offices

a. Manufactured units, such as mobile homes, may be used as temporary construction offices when located on the same property as the construction project. Such offices shall as closely as possible comply with the yard requirements of the zoning district in which they are located. The unit shall be removed immediately after completion of the construction.

b. Manufactured units may be used as temporary offices while a project is under construction/development, provided the following:

1. Written approval is granted by the Zoning Administrator.

2. Approval shall be for six months only in the case of residential development.

II.11 Manufactured Units as Temporary Non-Residential Structures (not-related to construction)

Manufactured units, such as mobile homes may be used as temporary non-residential structures where such non-residential uses are permitted by this Zoning Ordinance. Non-residential manufactured units' usage shall comply with the following provisions in order to protect the structure and neighboring structures from fire and storm damage, and to protect the nature and characteristics of the neighborhood:

a. The unit shall be situated on the lot so as to meet all applicable dimensional requirements, and in addition shall provide rear/side yards of at least fifteen (15) feet.

b. The unit shall be installed with its longest dimension parallel to the lot frontage.

c. A minimum of fifteen (15) feet shall separate the unit from other principal or accessory buildings on the same lot.

d. The unit shall meet the specifications of the U.S. Department of Housing and Urban Development, National Mobile Home Construction and Safety Standards.

e. Manufactured units as non-residential structures shall not be installed where such installation is in conflict with state or local fire codes.

f. No temporary non-residential use of a manufactured unit shall be permitted on a lot for longer than twelve (12) consecutive months.

g. When a temporary non-residential use of a manufactured unit on a lot has ended, twelve months shall elapse before another such unit (or use thereof) is allowed on that lot.

h. A manufactured unit used as a sales office on a lot which sells similar units is exempt from II.10.f and II.10.g, above.

II.12 Townhouse Dwelling Units

Where townhouse dwelling units are permitted as of right or conditionally by this Ordinance (see Section XIV.13), the following provisions shall apply.

a. Front yard, rear yard, and lot dimensions shall comply with Section XIV.14.

b. Minimum side yards shall be fifteen (15) feet for townhouse end units, with zero (0) feet for interior units.

c. Townhouse rows developed as a complex shall be separated by at least twenty (20) feet end to end, and thirty (30) feet in all other configurations.

d. Maximum lot coverage for a townhouse unit shall be fifty percent (50%).

e. No less than four (4), nor more than eight (8) units shall be allowed in each townhouse "row".

f. Townhouses shall be constructed without interior side yards; and no windows, doors, or other openings shall face the sides except at end units.

g. Manufactured (mobile) homes shall not be considered townhouses in any manner whatsoever.

II.13 Zero Lot Line Units

Where zero lot line dwelling units are permitted as of right or conditionally by this Ordinance (see Section XIV.13), the following provisions shall apply.

a. Front yard, rear yard, and lot dimensions shall comply with Section XIV.14.

b. Zero lot line units shall have no minimum yard requirements on one side, with ten (10) feet on the opposite side. If a yard is provided where none is required, such yard shall be at least four (4) feet wide. At least fifteen (15) feet shall separate a zero lot line development side from adjacent property or street lines.

c. Maximum lot coverage for a zero lot line unit shall be fifty percent (50%).

d. No less than four (4) units shall be allowed in a zero lot line development.

e. Zero lot line residences shall be constructed against the lot line on one side of the lot; and no windows, doors, or other openings shall face this side. Where adjacent zero lot line units are not constructed against a common lot line, the developer shall provide a perpetual wall maintenance easement of four (4) feet in width along the adjacent lot and parallel with such wall.

f. Manufactured (mobile) homes shall not be considered zero lot line units in any manner whatsoever.

II.14 Height Regulations

The following regulations shall apply in all zoning districts, unless stated otherwise in this Ordinance:

a. Chimneys, water tanks, penthouses, towers, scenery lofts, elevator shafts, smokestacks, ornamental spires, wireless or broadcasting towers, cupolas, domes, false mansards, parapet walls, and similar structures and necessary structural mechanical appurtenances may be erected to a height fifteen (15) feet above the maximum building height indicated by Section XIV.14.

b. In locations where adopted Airport Hazard Zoning regulations are applicable, the height of structures shall in addition comply with those requirements.

c. No other building or structure or appurtenance shall exceed the height limits as set forth in Section XIV.14; and further that the Ashland Fire Department shall approve such maximum height extensions where such would involve routine human occupancy or use.

II.15 Outdoor Storage

Where outdoor storage is permitted as a principal or accessory use, the following provisions shall apply:

a. Storage of vehicles and household items in residential districts shall comply with Sub-Section II.6.b

b. Storage of items in non-residential districts (and non-residential uses in residential districts) shall be completely enclosed by a security fence at least six (6) feet in height. Where such storage area abuts or is within one hundred (100) feet of a residential district, it shall be screened from view on residential property. Passenger vehicle storage is exempt from this enclosure/screening requirement.

II.16 Outdoor Illumination of Uses

Outdoor non-residential lighting facilities and fixtures used to illuminate signs, the exterior of structures, parking areas, or for other purposes shall be so arranged that the source of light does not shine directly into adjacent residential properties and does not interfere with traffic.

II.17 Flood Plain Development

Any construction and or land disturbing activity proposed to take place in a designated Flood Hazard Area requires a separate development permit, and is controlled by the City of Ashland Flood Control Ordinance.

II.18 Right-of-Way Development

Any construction or other development or private land usage within the public rights-of-way is prohibited unless specifically allowed by other provisions of this Zoning Ordinance.

II.19 Mixed Use Development

In the B-1, B-2, and B-3 Business Zoning Districts, residential dwelling units developed above or below (Ord 116, 1988) the ground floor of commercial uses are permitted, and are exempt from the dimensional and parking requirements of this Ordinance. Such dwelling units shall comply with all other applicable housing and development codes.

II.20 Home Occupation

Home occupations as defined by Article XV are permitted in all zoning districts, subject to the following conditions.

a. The occupation or profession shall be conducted entirely within the principal residential structure.

b. No more than one person outside the resident family shall be employed in the home occupation.

c. There shall be no outside or accessory building storage; nor any exterior display or other indication of the home occupation, except signs as permitted by Ordinance No. 21, 2012.

d. No more than twenty-five (25%) of the area of one floor of the principal residence shall be devoted to the home occupation.

e. The sale of products shall be limited to those manufactured on the premises.

f. The home occupation shall not involve the routine use of commercial vehicles for delivery of materials to and from the premises.

g. The home occupation shall be designed and operated so that customers (if any) shall be limited to one at a time on the premises.

ARTICLE III
NONCONFORMING SITUATIONS

III.1 Purpose and Intent

Within the districts established by this Ordinance and amendments that may later be adopted there exists lots, structures, uses of land and structures, and characteristics of use which were lawful before this Ordinance was adopted or amended, but which would be prohibited, regulated or restricted under the terms of this ordinance or future amendment. It is the intent of this Article to permit these nonconformities to continue until they are removed, but not to necessarily encourage their survival. The City of Ashland, however, desires that nonconforming situations be maintained in standard condition until such time that they can become conforming with this Ordinance. It is further the intent of this Article that such situations shall not be made nonconforming to a greater extent than exists at the time this Ordinance is adopted. To these ends, the regulations of this Article encourage nonconforming situations to be well maintained and to become more, rather than less, conforming over time.

III.2 Nonconforming Lots of Record

Where the owner of a lot of record does not own and cannot reasonably acquire sufficient adjacent land to enable conformance to the required open space, yard and other requirements herein prescribed, such lot of record may be used by said owner as a single family residential building site; provided that the required open space and other provisions conform as closely as possible to the requirements of the Zoning District in which it is located. Parking, landscaping, buffer and loading requirements shall be met in those instances of new development or expansion of existing development; and four (4) foot side yards shall be maintained.

III.3 Extension or Enlargement of Nonconforming Situations

Except as specifically provided below, it shall be unlawful for any person to engage in any activity that causes an increase in the nonconformity.

a. A nonconforming use may be extended throughout any portion of a complete building. However, a nonconforming use may not be extended to additional buildings or to land outside the original building except in accordance with Section III.6 (Completion of Nonconforming Projects) of this Ordinance.

b. Subject to Section III.6 (Completion of Nonconforming Projects) of this Ordinance, a nonconforming use of open land may not be extended to cover more land than was occupied by that use when it became nonconforming.

c. Physical alteration of structures or the placement of new structures on open land are unlawful if they result in:

    1. An increase in the total amount of space devoted to a nonconforming use; and/or

2. Greater nonconformity with respect to dimensional restrictions such as yard requirements, height limitations, parking or density requirements.

d. Notwithstanding Subsection III.3.c above, any structure used for a single family residential purposes and maintained as a nonconforming use may be replaced with a similar structure of a larger size, so long as the replacement does not create new nonconformities or increase the extent of existing nonconformities with respect to yard and setback requirements. This paragraph is subject to Section III.4 (Abandonment and discontinuance of nonconforming Situations).

e. A structure that is nonconforming in any respect, or a structure that is used in a nonconforming manner, may be reconstructed or replaced if partially or totally destroyed, subject to the following restrictions:

1. The total amount of space devoted to a nonconforming use may not be increased, except that a larger single family residence may replace smaller one.

2. The reconstructed structure may not be more nonconforming with respect to dimensional restrictions such as yard, height, parking or density requirements, except for single family houses as provided for in Subsection III.3.e.1, above.

III.4 Abandonment and Discontinuance of Nonconforming Situations

a. Nonconforming Use. When a nonconforming use is discontinued for a consecutive period of one hundred and eighty (180) calendar days, the property involved may thereafter be used only for conforming purposes, unless the Board of Zoning Adjustment issues a Nonconformity Permit to allow the same or another nonconforming use upon finding all of the below:

1. The nonconforming use has been discontinued for less than two (2) years, and,

2. The discontinuance resulted from factors that, for all practical purposes, were beyond the control of the person maintaining the nonconforming situation, and

3. The proposed use is not more nonconforming than the previous nonconformity.

b. For purposes of determining whether a right to continue a nonconforming situation is lost pursuant to the provisions of this Section, all of the building, activities, and operations maintained on a lot are generally to be considered as a whole. For example, the failure to rent one (1) multi-family unit shall not result in a loss of the right to rent that unit thereafter so long as the multi-family building as a whole is continuously maintained. But if a nonconforming use is maintained in conjunction with a conforming use, discontinuance of the nonconforming use for the above stated time period shall terminate the right to maintain it thereafter.

III.5 Change in Kind of Nonconforming Use

a. If a nonconforming use exists on the effective date of this Ordinance that would be allowed under the terms of this Ordinance, the nonconforming use may be continued so long as it remains otherwise lawful, subject to the following provisions:

1. A nonconforming use may be changed to a conforming use. Thereafter the property may not revert to a nonconforming use.

2. A nonconforming use may be changed to another nonconforming use only in accordance with a Nonconformity Permit issued by the Board of Zoning Adjustment. The Board shall issue such permit if it finds that the proposed use will be in the same or more restricted use classification.

b. If a nonconforming use and conforming use, or any combination of conforming and nonconforming uses, or any combination of nonconforming uses exist on one lot, the use made of the property may be changed substantially (except to a conforming use) only in accordance with a Nonconformity Permit issued by the Board of Zoning Adjustment. The Board shall issue such a permit if it finds that the proposed use will be in the same or more restricted use classification.

III.6 Completion of Nonconforming Project

Projects made nonconforming by provisions of this Ordinance or amendments thereto may be completed if a valid building permit was issued, or substantial expenditures were made, prior to the effective date of this ordinance or subsequent amendments thereto. The mere purchase of property shall not be considered a substantial expenditure under these provisions.

III.7 Nonconforming Signs See Ordinance No. 21, 2012.

All nonconforming signs in all zoning districts shall comply with Ordinance No. 21, 2012.

III.8 Nonconformity Permit

a. The Board of Zoning Adjustment is authorized to issue Nonconformity Permits under certain provisions of this Article. No building or other development permit or certificate of occupancy may be issued in these instances without a Nonconformity Permit.

b. The Board shall determine whether the proposed changes comply with the standards set forth in this Article, and may attach conditions with the issuance of a Nonconformity Permit, to further the intent of this Article.

BLANK PAGE

ARTICLE IV
LANDSCAPING AND BUFFER REQUIREMENTS

IV.1 Purpose

Landscaping and buffer requirements are established to improve the appearance of vehicular use areas and property abutting public rights-of-way; to require buffering between incompatible land uses; to protect, preserve, and promote the visual appeal, character, and value of surrounding neighborhoods; and to promote public health and safety through the reduction of pollution.

IV.2 General Requirements

a. No new site development, building, structure, or vehicular use area shall hereafter be erected, constructed, or used unless landscaping is provided as required by the provisions of this Article.

b. No property lines shall be altered, nor shall any building, structure, or vehicular use area be expanded, unless the minimum landscaping required by this Article is provided for the property to the extent of its alteration or expansion, but not necessarily for the entire property.

c. No building permit shall be issued until the required landscaping plan has been submitted and approved, and no certificate of occupancy shall be issued until the landscaping is completed as certified by the Zoning Administrator, unless a performance bond or other acceptable guarantee of improvements has been posted.

d. Where site plan approval by the Zoning Administrator or Board of Zoning Adjustment is required, no building permit or certificate of occupancy shall be issued until such approval has been granted. In the event that the requirements of this Article conflict with those of other provisions of this Ordinance, the more restrictive shall apply.

e. The City Administration may vary specific planting standards of this Article when it is determined that the purpose statement and other provisions have been otherwise exceeded.

f. The Board of Zoning Adjustment may reduce through the variance procedure outlined in Section XI.7 of this Ordinance certain standards of this Article; however, the Board shall not have the power to waive any specific provision (Ord 126, 1989).

IV.3 Screening and Buffer Requirements

Screening and buffering shall be provided in the locations and in accordance with the following provisions.

a. Residential:

   1. In all residential major subdivision developments, approved pursuant to the Subdivision Regulations of the City of Ashland, a buffer strip at least twenty (20) feet in depth or width shall be provided adjacent to all limited access highways, all

railroad rights-of-way, and commercial and industrial zoning districts (along side and rear property line). The buffer strip shall be in addition to the depth or width required, and shall be a part of the platted lots having the following restriction designated on the plat: "This strip reserved for the planting of trees or shrubs; the building of structures hereon is prohibited."

2. The buffer strip shall be planted with deciduous and/or evergreen trees, spaced not more than forty (40) feet apart, with a row of shrubs, spaced not more than five (5) feet apart.

b. Non-Residential:

1. In all commercial and industrial zoning districts, a ten (10) foot buffer strip shall be provided along the side and/or rear property lines adjoining residentially zoned lots. Within the buffer strip, grass, trees, shrubs, and/or fencing shall be placed together which form a dense year-round barrier designed to effectively screen the uses within the subject property from the view of adjacent residential uses (existing or future). Such buffer strips may be included in part of a required yard.

   a. For non-residential lots one half acre or larger, the buffer strip shall be at least ten (10) feet wide.

   b. For non-residential lots smaller than one half acre, the buffer strip shall be at least five (5) feet wide (Ord 126, 1989).

2. Fencing may be a solid wall or a barrier of wood, brick, or other material. All walls and fences shall be at least six (6) feet in height, and vegetation shall attain that height within two (2) normal growing seasons.

IV.4 <u>Landscaping Requirements: Vehicular Use Areas</u>

a. Areas Regulated:

Vehicular use areas covered by the requirements of this Section include off-street parking for five (5) or more vehicles, including the internal vehicular circulation system for five (5) or more vehicles. Also covered are the loading areas (and access thereto) for two (2) or more loading bays. Lesser areas are exempt from the provisions of this Section. Vehicular use areas for ten (10) or fewer vehicles are further exempt from Provisions (c) and (d) of this Section (peripheral and interior coverage requirements).

b. Street Frontage Landscaping Requirements:

On the site of a building or structure or open lot use providing off-street parking, loading, or other vehicular use area, where such area will not be entirely screened visually by an intervening building or structure, landscaping shall be required along any side that abuts the right-of-way of street or highway. Such landscaping shall be provided as follows:

1. A landscaping strip of at least five (5) feet in depth shall be located between the abutting right-of-way and any off-street parking, loading, or other vehicular use area, except where driveway openings are to be provided.

2. The landscaping strip shall be planted in accordance with the following standards as a minimum:

   a. One (1) tree shall be planted for each fifty (50) linear feet of the landscaping strip, or portion thereof.

   b. A hedge, wall, or other landscape barrier shall be planted or erected adjacent to the street right-of-way line.

   c. All portions of the landscaping strip not planted with the shrubs and trees, or covered by a wall or other barrier, shall be planted in grass or other ground cover.

3. In areas of the City where there is fifteen (15) or more feet between the property line and the paved edge of the road, the street frontage landscaping strip may be situated within the public right-of-way. A formal Limited Use of Right-of-Way Agreement must be approved by the Ashland City Commission in accordance with Ordinance 122, Series 1986 (as may be amended) for this provision to be used. The property owner shall be responsible for maintenance and liability associated with such right-of-way landscaping (Ord 126, 1989).

c. Peripheral Coverage Requirements:

In addition to the requirements of Subsection IV.4.b, peripheral landscaping shall be provided along the sides of regulated off-street parking, loading, or other vehicular use areas that abut adjoining property not a right-of-way. Such landscaping shall be, as a minimum, provided as follows:

1. A landscaping strip at least three (3) feet in width shall be located between the parking, loading, or other vehicular use area and the abutting property lines, except where driveway openings are to be provided. Landscaping is not required along an improved alley.

2. The landscaping strip shall be planted in accordance with the following standards as a minimum:

   a. One (1) tree shall be planted for each sixty (60) linear feet of landscaping strip, or portion thereof.

   b. A hedge, wall, or other durable landscape barrier shall be planted or erected adjacent to the common lot line (if a yard is required or likely to be provided on the abutting property).

c. All portions of the landscaping strip not planted with shrubs or trees, or covered by a wall or other barrier, shall be planted in grass or other ground cover.

3. The provisions of this subsection shall not be applicable in following situations:

a. Where any off-street parking, loading, or other vehicular use area will be entirely screened visually by an intervening building or structure from abutting property.

b. Where any vehicular use area is immediately adjacent to a structure built on the side property line (Ord 126, 1989).

c. Where planting and/or fencing is required for screening between incompatible land uses, pursuant to Section IV.3

d. Interior Coverage Requirements:

Not less than five percent (5%) of the interior of any regulated parking, loading, or other vehicular use area shall be landscaped. The location of such landscaping is at the option of the owner or developer, except in the case of large-scale commercial, industrial, or residential parking development. In such instances, at least every eighth row of parking shall be separated by a median strip, for landscaping and pedestrian purposes, of not less than eight (8) feet in width. Additionally, and in all other cases, landscaping shall be reasonably dispersed throughout the parking lot in end planters and median strips. Such interior landscaping shall include trees, shrubs, and ground cover. Planting required by Sections IV.3, IV.4.b, and IV.4.c, shall not be considered as part of the interior landscaping requirements.

IV.5 Plan Review and Approval

Whenever any property is affected by these landscape and buffer requirements, the property owner or developer shall prepare a plan for submittal to, and approval by, the Zoning Administrator. The Zoning Administrator shall follow the requirements of this Section in approving any plan required herein. The contents of the plan shall include the following:

a. The dimensions and acreage of the lot or plot or portion thereof to be built upon or otherwise used;

b. The layout of the entire project, including the proposed uses of all structures, and its relation to adjoining properties;

c. The layout of all off-street parking and loading areas, including the location of entry and exit points, the internal vehicular circulation pattern, and the location and dimensions of required parking and loading spaces;

d. The location and dimensions of present and proposed streets and highways (and private drives if applicable);

e. The location of all existing and proposed plantings and screenings, including name, installation size, and quantities;

f. The location of wall, fences, and railings, and an indication of their height and construction materials;

g. Title, north arrow, scale, names of owner, developer, person responsible for plan preparation, and the date of plan preparation.

IV.6 Sight Distance Requirements: Driveways and Street Intersections

To ensure that landscape materials do not constitute a driving and pedestrian hazard, a "sight triangle" will be observed at all street intersections or intersections of driveways with streets. Within the sight triangle, no landscape material, wall, or other obstruction shall be permitted between the height of two (2) feet and eight (8) feet above the street or driveway elevation. The sight triangle shall consist of the following; or other dimensions having a similar effect when intersections are not ninety (90) degrees. Driveways to single family and two-family residences are exempt.

a. Intersecting streets shall have a sight triangle with two sides being fifteen (15) feet along the abutting rights-of-way lines, measured from their point of intersection, and the third side being a line connecting the ends of the other two lines.

b. A street intersecting a railroad track shall have a sight triangle with two sides being twenty-five (25) feet along the abutting rights-of-way lines, measured from their point of intersection, and the third side being a line connecting the other two lines.

c. A street intersecting a driveway shall have a sight triangle with one side being fifteen (15) feet along the right-of-way, one side being ten (10) feet along the abutting driveway edge, and the third side being a line connecting the other two sides.

d. The B-3 Business/Downtown district shall be exempt from these site distance requirements because of the large scale dense development, low traffic speeds, and adequate traffic controls.

IV.7 Installation and Maintenance

a. Existing landscape material in satisfactory condition may be used to satisfy these requirements in whole or in part when such material achieves the objectives of this Article. Otherwise, all landscaping shall be of good quality and installed in a sound, workmanlike manner.

b. Parking vehicles may overhang a landscaped area no more than one-half (1/2) foot, provided curbing or other wheel stops are installed to ensure no greater overhang or

penetration of the landscaped area. Landscaping, walls, fences, and any other material shall be so located to prevent its damage and/or destruction by over-hanging vehicles.

c. The type of landscape material used in meeting the requirements of this Article is at the option of the owner or developer. However, a recommended plant list shall be maintained by the City to provide detailed information on appropriate plant materials.

d. All trees to be used shall be a minimum of eight (8) feet in overall height upon planting. Shrubs shall be a minimum of two (2) feet in height when measured immediately after planting. In any event, plant material required for the purpose of screening shall be of such initial size to reach the required height and density within two (2) normal growing seasons.

e. The owner and tenant of the property shall be responsible for the continued, proper maintenance of all landscaping materials, and shall keep them in a proper, neat, and orderly appearance, free from refuse and debris, at all times. All landscaped areas shall be provided with a readily available water supply. All unhealthy or dead plant material shall be replaced within one (1) year, or by the next planting season, whichever comes first.

ARTICLE V
OFF-STREET PARKING REQUIREMENTS

V.1 Purpose

Off-street parking requirements are established in order to assure the proper and uniform development of parking areas throughout the City of Ashland to relieve traffic congestion in the streets, and to minimize detrimental effects of off-street parking areas on adjacent properties.

V.2 General Requirements

a. The requirements of this Article shall apply to off-street parking lots provided for five (5) or more vehicles, as determined by the Schedule of Off-Street Parking Requirements, Section V.6. Lesser areas are exempt from the provisions of this Article except that the off-street parking spaces required by Section V.6 shall be provided for all land uses.

b. Off-street parking lots provided in the B-3 Business/Downtown District, and other lots provided, though not required by Section V.6, shall conform with Sections V.2 and V.5 of this Article.

c. Each application for a building permit or certificate of occupancy shall include plans and other information of sufficient detail to enable the Zoning Administrator to determine whether or not the requirements of this section have been met. Parking plans shall include information as to (not required for one and two family dwellings):

    1. The location and dimensions of driveway entrances, access aisles and parking spaces.

    2. The provisions of vehicular and pedestrian circulation.

    3. The location of sidewalks and curbs.

    4. The location of signs.

    5. Typical cross-section of pavement.

    6. Storm drainage facilities, utilities and such other information or plans as circumstances may warrant.

    7. Landscaping plan showing compliance with Article IV.

d. The building permit or certificate of occupancy for the construction or use of any building, structure, or land where off-street parking space is required shall be withheld by the Zoning Administrator until the provisions of this Article have been met. If at any time such compliance ceases, any certificate of occupancy which shall have been issued for the use of property shall become void.

V.3 Location of Off-Street Parking Space

The off-street parking space required by this Article shall be located on the same lot with the uses served. Where off-street parking required in the connection with a use cannot be located on the lot with the use, such parking may be provided off the lot, subject to the following standards:

a. The off-street spaces shall be within 500 feet of the main entrance of the use for which the parking is required. The distance shall be measured along routes generally available to the pedestrians.

b. Off-lot spaces shall be located only in those zoning districts in which similar off-street parking is permitted.

c. The off-lot parking area shall be held in fee simple by the same owner as the use requiring the off-street parking spaces; or under lease, rental, or other form of agreement satisfactory to the City of Ashland as assuring continuing availability of required off-street parking for the use.

d. In the event that the lease or agreement expires, or that the off-lot area is used for other than parking space for the use for which it is required, the use and/or structure shall not be continued or occupied until the requirements of this Section have been met.

V.4 Interpretation and Modification

Where uncertainty exists as to the application of the requirements of this Article, or where the applicant for a permit for a building or use finds that the required off-street parking is in excess of the needs of the use or building proposed, the following rules shall apply:

a. Where other sections of this Ordinance impose additional or greater requirements than those set forth in Section V.6, Schedule of Off-Street Parking Requirements, the more restrictive shall apply.

b. Parking requirements for a use not listed in Section V.6 shall be the same as for a listed use of the same general characteristics of traffic generation.

c. When more than one use occupies a building or premises, the parking requirements shall be equal to the sum of the requirements of each use.

d. If the applicant for a building permit or certificate of occupancy finds that the off-street parking requirements are in excess of the needs of the proposed building or use, the Board of Adjustment may reduce the number of spaces required and the extent of parking area to be improved, upon finding that any proposed modification shall be sufficient to serve the traffic generated, and that no hazard or traffic congestion shall result. If the building or premises for which the modification is requested is thereafter occupied by a use which requires a greater number of off-street parking spaces, the use and/or building shall not be continued or occupied until the requirements of this Article have been met.

e. Up to fifty percent (50%) of the required parking for a theater, auditorium, night club or similar use not normally open during regular business hours, and up to one hundred percent (100%) of the required space for a church, may be provided and used jointly by banks, offices, retail stores and similar uses not normally open or operated during the same hours, provided that a formal agreement between the parties concerned is properly executed and filed with the Zoning Administrator.

V.5 Design Standards

All regulated off-street parking areas shall conform with the following design standards:

a. All parking spaces shall have minimum dimensions of nine (9) feet in width and eighteen (18) feet in length. All access or backup aisles shall conform to the following minimum dimensions.

Parking Angle	Aisle Dimension
90°	24 feet
60°	18 feet
45°	14 feet
30°	12 feet
Parallel	12 feet

b. Where off-street parking is provided for ten (10) or more vehicles, thirty percent (30%) of the stalls may be designated for compact cars. The dimensions for compact car stalls shall be at least eight (8) feet in width and sixteen (16) feet in length. A majority of such compact car stalls shall be located closer to the main entrance of the use for which the parking is provided than the majority of other parking stalls. Such compact car stalls shall be readily identified as such by some form of signage.

c. The use of streets, sidewalks, or other public rights-of-way for parking or maneuvering to and from off-street parking spaces is prohibited. All off-street parking areas shall be so arranged that ingress and egress is by forward motion of the vehicle. One and two family dwellings are exempt from this provision. Improved alleys are likewise exempt from this provision.

d. Parking structures on more than one level shall be designed in accordance with the standards set forth herein for grade level parking facilities insofar as they can be reasonably applied.

e. Required off-street parking areas, including drives and access ways, shall be paved with an all-weather hard surface material.

f. Parking area edges shall be protected by suitable curbing to prevent vehicular encroachment on a public right-of-way or an adjacent property, and to protect the public right-of-way and adjoining properties from the damaging effects from surface drainage from parking lots.

g. Where parking or loading areas are provided adjacent to a public street, ingress or egress thereto shall be made only through driveways not exceeding thirty (30) feet in width at the curb line of said street, except where the Zoning Administrator finds that a greater width is necessary to accommodate the vehicles customarily using the driveway.

h. Where two (2) or more driveways are located on the same lot, the minimum distance between such drives shall be thirty (30) feet or one-third (1/3) of the lot frontage, whichever is greater.

i. Business integrated into a unified shopping center or cluster of commercial facilities shall use the common access with other business establishments in that center.

j. No driveway shall be located closer than twenty-five (25) feet to and any street intersection.

k. Non-residential facilities for ten or more spaces shall be lighted, and any lighting of parking areas shall be shielded so as to cast no glare upon adjacent properties and streets.

l. Landscaping shall comply with Article IV of this Ordinance.

V.6 Schedule of Off-Street Parking Requirements

Off-street parking shall be provided and maintained as specified in the following schedule. These requirements shall apply to all new buildings and uses and to expansion of existing buildings and uses (where such are expanded by 30% or greater, and to the extent of such expansion), in all districts except the B-3 Business/Downtown district.

USE	PARKING REQUIREMENTS
Residential	
Dwellings (includes Mobile Homes)	1 space per unit.
Multi-family designed for elderly	1 space per 2 units.
Institutional (nursing home, orphanage, group home)	2 spaces per 5 beds, 1 space per employee.
All non-residential	1 space per company owned/inventoried Vehicle, in addition to below requirements.
Automobile Service Station, Repairs	3 spaces per bay.
Bowling Alley	4 spaces per lane.
Day Care Center	1 space per employee, 1 space per 5 children.
Drive In/Up Facility (bank, dry cleaning, car wash, restaurant, etc.)	5 stacking spaces per window/bay. (in addition to other requirements)
Flea Market	2 spaces per booth.

Hospital	2 spaces per 3 employees (largest shift), 1 space per resident doctor, 1 space per 2 beds.
Industrial Manufacturing, and Warehousing	2 spaces per 3 employees (largest shift), 1 visitor space per 10 employees.
Medical, Dental, & Veterinary Care	6 visitor spaces per doctor, 2 spaces Per 3 employees.
Motel, Boarding House	1 space per each room, plus 1 additional space per 5 rooms.
Offices	1 space per 200 square feet of gross floor area.
Open Air Uses (building materials; salvage Yards; car, trailer and boat lots with less than 1000 square feet of enclosed display and sales area; markets)	1 space per 1,500 square feet of gross lot area.
Public/Private Assembly (Auditorium, theater, club, church museum, indoor recreation, funeral home, etc.)	1 space per 50 square feet gross floor area, or 1 space per 4 persons at maximum capacity (whichever is more).
Restaurant, Lounge	1 space per 75 square feet gross floor area.
Retailing & Personal Service	1 space per 200 square feet gross floor area.
Retailing of Bulk Items (vehicles, Furniture, etc.)	1 space per 500 square feet gross floor area.
Schools, All	2 spaces per 3 employees, 1 space per 10 Seats in gymnasium or auditorium (largest one).
Senior High, College	additionally, 5 spaces per classroom.
Trade, Vocational School	1 space per 200 square feet gross floor area.
Self Service Laundry	1 space per 2 washing machines.

BLANK PAGE

ARTICLE VI
OFF-STREET LOADING REQUIREMENTS

VI.1 Purpose

Off-street loading requirements are established in order to assure the proper and uniform development of loading areas throughout the City of Ashland to relieve traffic congestion in the streets and to minimize any detrimental effects of off-street loading areas on adjacent properties.

VI.2 General Requirements

a. Each application for a building permit or certificate of occupancy shall include plans and other information of sufficient detail to enable the Zoning Administrator to determine whether or not the requirements of this Article have been met. Plans for off-street loading areas shall include information as to:

   1. The location and dimensions of driveway entrances, access aisles, and loading spaces.

   2. The provisions for vehicular and pedestrian circulation.

   3. The location of sidewalks and curbs.

   4. Typical cross-section of pavement.

   5. Storm drainage facilities, utilities and such other information or plans as circumstances may warrant.

b. A building permit or certificate or occupancy for the construction or use of any building, structure or land where off-street loading space is required shall be withheld by the Zoning Administrator until the provisions of this Article have been met. If at any time such compliance ceases, any certificate of occupancy which shall have been issued for the use of the property shall become void.

VI.3 Location of Off-Street Loading Space

The off-street loading space required by this Article shall be provided for standing, loading and unloading operations either inside or outside a building and on the same lot with the use served.

VI.4 Interpretation and Modification

Where uncertainty exists as to the application of the requirements of this Article, or where the applicant for a permit for a building or use finds that the required off-street loading is in excess of the needs of the use or building proposed, the following rules shall apply:

a. Where other provisions of this Ordinance impose additional or greater requirements than those set forth in Section VI.6, Schedule of Off-Street Loading Requirements, the greater shall apply.

b. Loading requirements for a use not listed in Section VI.6 shall be the same as for a listed use of the same general characteristics.

c. Where more than one (1) use occupies a building or premises, the loading requirements shall be equal to the sum of the requirements of each use.

d. If the applicant for a building permit or certificate of occupancy finds that the off-street loading requirements is in excess of the needs of the proposed building or use, the Board of Adjustment may reduce the number of spaces required and the extent of the loading area to be improved, upon finding that any proposed modification shall be sufficient to serve the building or use, and that no hazard or traffic congestion shall result. If the building or premises for which the modification is requested is thereafter occupied by a use which requires a greater number of off-street loading spaces, the use and/or building shall not be continued or occupied until the requirements of this Article have been met.

VI.5 Design Standards

All off-street loading areas required by this Article shall conform with the following design standards:

a. For uses containing a gross floor area of less than 20,000 square feet, each off-street loading space shall have minimum dimensions of thirteen (13) feet in width and forty-five (45) feet in length.

b. For uses containing a gross floor area of 20,000 square feet or more, each off-street loading space shall be fifteen (15) feet in width and fifty-five (55) feet in length as a minimum.

c. All off-street loading spaces shall have a minimum vertical clearance of fifteen (15) feet.

d. Access aisles or apron spaces shall be of sufficient width to allow for proper backing and/or turning movements.

e. Required off-street loading areas including drives and access aisles shall be paved with an all-weather hard surface material.

f. Loading spaces and access ways shall be located in such a way that no truck or service vehicle using such area shall block or interfere with the free, normal movement of other vehicles on a service drive or on any off-street parking area, public street, aisle or pedestrian area used for general circulation.

g. Loading area edges shall be protected by suitable curbing to prevent vehicular encroachment on a public right-of-way or on adjacent property, and to protect the public right-of-way and adjoining properties from the damaging effects of surface drainage from off-street loading areas.

h. Driveways shall be provided as required in Subsections V.5 (h) and

i. Any lighting of loading areas shall be shielded so as to cast no glare upon adjacent properties and streets.

VI.6 Schedule of Off-Street Loading Requirements

Off-street loading shall be provided and maintained as specified in the following schedule. These requirements shall apply to all buildings and uses in all districts except the B-3 Business/Downtown District where development is at such density that they cannot reasonably be imposed.

a. Uses which normally handle large quantities of goods, including but not limited to industrial plants, wholesale establishments, storage warehouses, freight, terminals, hospitals or sanitariums, and retail sales establishment shall provide off-street loading facilities in the following amounts:

Gross Floor Area Square Feet	Minimum Number of Spaces Required
5,000 – 20,000	1
20,001 – 50,000	2
50,001 – 80,000	3
80,001 – 130,000	4
For each additional 50,000	1 additional

b. Uses which do not handle large quantities of goods, including but not limited to office buildings, restaurants, funeral homes, hotels, hospitals, and places of public assembly, shall provide off-street loading facilities in the following amounts:

Gross Floor Area Square Feet	Minimum Number of Spaces Required
5,000 – 80,000	1
80,001 – 200,000	2
200,001- 320,000	3
320,001 – 520,000	4
For each additional 200,000	1 additional

BLANK PAGE

ARTICLE VII
SOIL EROSION AND SEDIMENT CONTROL

VII.1 Purpose and Findings

Erosion and resultant sedimentation problems are caused from rainfall and runoff over unprotected soil. Erosion is increased by intense rainfalls, long slopes, steep slopes, and lack of adequate vegetative cover. These conditions are in part caused by or aggravated by improper construction, grading, or excavation which results in removal of natural ground cover without taking appropriate steps to control erosion problems.

It is hereby determined that unnecessary soil erosion and sedimentation necessitates costly repairs and maintenance of storm sewers, gutters, and other public works, reduces the clarity of public water, increases the costs of providing pure drinking water, and reduces the attractiveness and safety and welfare requires regulation of land balancing, development and construction activities to avoid unnecessary soil erosion; and that the regulations contained in this Ordinance are the minimum regulations which will help avoid the consequences herein set forth and protect the public health, safety and welfare.

VII.2 Applicability

The provisions of this Article apply to every lot in the City of Ashland except where the following occur:

a. Excavation below finished grade:

   1. for basements and footings of a one-family or two-family residential structure.

   2. for retaining walls,

   3. for swimming pools,

   4. for cemeteries for human or animal burial, or

   5. for accessory structures related to one-family or two-family structures authorized by this Ordinance.

b. An excavation or fill provided it:

   1. is less than four (4) feet in vertical depth/height at its deepest point as measured from the natural ground; and

   2. does not result in a total quantity of more than 100 cubic yards of material being removed from, deposited on or disturbed on any lot, parcel or subdivision thereof; and

   3. does not impair existing surface drainage, constitute a potential erosion hazard, or act as a source of sedimentation to any adjacent land or water course; and

4. has no final slopes steeper than one (1) foot vertical for three (3) feet horizontal; and

5. has proper vegetative cover reestablished as soon as possible on all disturbed areas; and

6. has no fill placed on a surface having a slope steeper than five (5) feet horizontal to one (1) foot vertical.

c. Accepted agricultural land management practices such as plowing, cultivation, construction of agricultural structures, nursery operations such as the removal and/or transplanting of cultivated sod, shrubs, and trees, tree cuttings at or above existing ground level, and logging operations leaving the stump, ground cover and root mat intact.

d. Grading, provided:

1. the aggregate area(s) affected, or stripped at any one time does not exceed 10,000 square feet; and

2. the grade change does not exceed eighteen (18) inches at any point and does not alter the drainage pattern; and

3. proper vegetative cover is reestablished as soon as possible on all disturbed areas; and

4. the grading does not involve a quantity of material in excess of 100 cubic yards.

e. Installation of lateral sewer lines, telephone lines, electricity lines, gas lines or other public service facilities.

VII.3 Requirements

For uses and activities covered under this subsection, no grading, excavation or filling shall occur and a building permit shall not be issued until a grading permit has been issued by the Zoning Administrator. To receive approval of a grading permit, the owner must submit an erosion control plan that applies accepted soil erosion and sediment control procedures to the lot's unique physical conditions and the type of proposed construction to the lot's unique physical conditions and the type of proposed construction or soil-disturbance activity. In reviewing the plan, the Zoning Administrator may seek comments of the Boyd and Greenup Counties Soil Conservation District or any city department or government agency. The objectives of the review will be to determine whether the plan will adequately reduce soil erosion and result in stable soil conditions at the conclusion of the construction or soil-disturbance activity. If the applicant is required to submit a site development plan under provisions of Article VIII, Site Plan Regulations, hereof, the soil erosion plan shall be an integral part of the site development plan.

ARTICLE VIII
SITE PLAN REGULATION

VIII.1 Purpose

Under the provisions of this Ordinance, the use of land and various other characteristics of property development are controlled. The purpose of this Article is to provide a means for the Planning Commission or its representative to review and approve a site development plan that demonstrates how the regulations will be complied with for the subject lot(s) and how optional or discretionary choices are coordinated with requirements of this Ordinance.

VIII.2 Applicability

The provisions of this Article shall be complied with prior to the issuance of a building or other development permit on every lot in the City of Ashland except for the construction of or any addition to one and two-family structures or any other existing principal uses or principal structures that are to be expanded in area by less than fifty percent (50%).

VIII.3 Requirements

An applicant seeking a permit for construction activities covered by this Article shall first submit three copies of a development plan to the Zoning Administrator. The development plan shall show the following information. The Zoning Administrator shall have the right to waive certain information requirements from the following list that are not necessary to determine compliance of a specific plan with this ordinance.

a. The boundary lines of the area included in the site plan, including angles, dimensions and references to an existing street intersection, an arrow pointing north and the area of the land included in the site plan.

b. Existing and proposed grades and drainage systems and structures; and, when erosion control plans are required, topographic contours at intervals not exceeding two (2) feet shall be provided.

c. The shape, size, location, height and floor area of all existing and proposed structures.

d. Natural features such as trees, streams, lakes or ponds, the 100 year Flood Hazard Area, and man-made features such as existing roads and structures, with indication as to which are to be retained and which removed or altered. The location and type of landscaping treatment to be installed. Adjacent properties and their uses shall be identified.

e. Proposed streets, driveways, parking spaces, and sidewalks, with indication of direction of travel for one-way streets and drives inside radii of all curves. The width of streets, driveways and sidewalks and the total number of parking spaces shall be shown.

f. The size and location of all existing and proposed public and private utilities, and their easements.

g. A vicinity sketch showing the location of the site in relation to the surrounding street system.

h. A legal description of the lot; the name, address and telephone number of the owner, developer and designer.

i. Any other information necessary to establish compliance with this and other ordinances or the availability of adequate utility capacity.

VIII.4 Scope of Review

Upon receipt of any site plan, the Zoning Administrator shall review it to determine whether it is in proper form and contains all of the required information. The Zoning Administrator shall thereafter review the plan to determine:

a. Compliance with the rules and regulations contained in this Ordinance; and

b. The location and character of certain items that could affect the health, safety and welfare of the community such as entrance drives, parking lots, on-site and off-site provisions for storm water drainage, landscaped areas, pedestrian walkways, availability of utilities and provisions to mitigate negative impacts on adjacent development.

c. Other city departments or governmental agencies may be called upon for review and advice.

VIII.5 Action by Zoning Administrator

Upon completing the review, the Zoning Administrator shall select the most appropriate course of action from the following list of actions. The Zoning Administrator's actions and reasons for the actions shall be stated in writing. The Zoning Administrator shall act within twenty (20) working days after receipt of a properly prepared plan.

a. The Zoning Administrator may determine the site development plan complies with all of the applicable provisions of this Ordinance and approve the plan in writing; or

b. The Zoning Administrator may determine that certain changes in the development plan must be made to comply with this Ordinance or should be made to alleviate potential safety problems or negative impacts on adjoining property that could result from optional decisions made during preparation of the development plan. After presenting the proposed changes to the applicant, and after the applicant has resubmitted the plan either altered or unaltered, the Zoning Administrator shall take final action and approve or deny the plan within ten (10) working days of the plans resubmittal; or

c. The Zoning Administrator may deny approval of the development plan in writing, setting forth in detail the reasons, which shall be limited to any defect in form or required information, any violation of any provision of this Ordinance, or the inadequacy of any utility, with any changes which would make the plan acceptable.

ARTICLE IX
CELLULAR ANTENNA TOWER AND SMALL CELL TOWER REGULATIONS

IX.1 Purpose

The purpose of these regulations are: to provide for the safest and most efficient integration of cellular antenna towers and small cell towers for cellular telecommunications services or personal communications services within the community; to provide for such facilities in coordination with the recommendations of the comprehensive plan; and to allow for such facilities with the intention of furthering the public health, safety, and general welfare.

IX.2 General

Cellular antenna towers and small cell system towers for cellular telecommunications services or personal communications services may be allowed in any zoning district after Planning Commission or Staff review in accordance with the following procedures to ascertain agreement with the adopted comprehensive plan and the regulations contained within the zoning ordinance.

IX.3 Applicability

These regulations apply to every utility or company that is engaged in the business of providing the required infrastructure to a utility that proposes to construct a cellular antenna, small wireless facility, or small cell tower for cellular telecommunications services or personal communications services.

IX.4 Definitions

Antennas or Related Equipment. Any transmitting, receiving, or other equipment used to support cellular telecommunications service or personal communications service. This definition does not include towers.

Applicant. A person or entity who is authorized by the provisions of these regulations to file an Application for approval under these regulations.

Application. An Application is the completed form or forms and all accompanying documents, exhibits, and fees required of an Applicant by Staff or the Planning Commission as part of a submission for review.

Cellular Antenna Tower. A tower constructed for, or an existing facility that has been adapted for, the location of transmission or related equipment to be used in the provision of cellular telecommunications services or personal communications services.

Cellular Communications Service. A retail telecommunications service that uses radio signals transmitted through cell sites and mobile switching stations.

Co-location. Locating two (2) or more transmission antennas or related equipment on the same cellular antenna tower.

Non-Tower Wireless Communications Facilities. Wireless communications facilities other than tower-based that are located on buildings, utility poles as defined by this section, and other existing structures.

Personal Communications Services. Commercial mobile services, unlicensed wireless services, and common carrier wireless exchange access services as defined in 47 U.S.C. sec. 332(c).

Planning Commission. The City of Ashland Planning Commission.

Right-Of-Way. The surface of and space above and below any real property in the City in which the federal government, Commonwealth, or City has a regulatory interest, or interest as a trustee for the public, as such interests now or hereafter exist, including, but not limited to, all streets, highways, avenues, roads, alleys, sidewalks, tunnels, bridges, or any other public place, area, or property under the control of the federal government, Commonwealth, or City.

Small Cell Tower. A pole originally installed for the primary purpose of supporting wireless telecommunications equipment

Small Wireless Facilities. Facilities that meet each of the following conditions:

1. The facilities

    a. Are mounted on structures 50 feet or less in height including their antennas; or

    b. Are mounted on structures no more than 10 percent taller than other adjacent structures; or

    c. Do not extend existing structures on which they are located to a height of more than 50 feet or by more than 10 percent, whichever is greater;

2. Each antenna associated with the deployment, excluding associated antenna equipment, is no more than three cubic feet in volume;

3. All other wireless equipment associated with the structure, including the wireless equipment associated with the antenna and any pre-existing associated equipment on the structure, is no more than 28 cubic feet in volume;

4. The facilities do not result in human exposure to radio frequency in excess of the applicable safety standards specified in 47 C.F.R. 1.1307(b).

Staff. Those employees of the City of Ashland assigned to support and/or administer the powers and duties proscribed to the Planning Commission.

Stealth Technology. Design techniques used to blend objects into the surrounding environment and to minimize visual impact. These design techniques may be applied to wireless communications towers, antennas, and other facilities, which blend the proposed facility into the existing structure or visual backdrop in such a manner as to render it less visible to the casual

observer. Such methods include but are not limited to facilities constructed to resemble light poles, flag poles, or other streetscape amenities.

Utility Pole. A structure originally constructed for the support of electrical, telephone, cable television or other video services, street lighting, or other similar cables and located within the Right-Of-Way or utility easements. A pole originally installed for the primary purpose of supporting wireless telecommunications equipment, regardless of the timeframe between pole installation and connection/implementation of transmission equipment, is considered a Small Cell Tower and is not a Utility Pole.

IX.5 Regulations for Cellular Antenna Towers

A. Application Requirements

Applications for the construction of cellular antenna towers for cellular telecommunications services or personal communications services shall include the following:

1. The full name and address of the applicant

2. The applicant's articles of incorporation, if applicable.

3. A geotechnical investigation report, signed and sealed by a professional engineer registered in Kentucky, that includes boring logs and foundation design recommendations.

4. A written report, prepared by a professional engineer or land surveyor, of findings as to the proximity of the proposed site to flood hazard areas.

5. Clear directions from the City of Ashland building located at 1700 Greenup Avenue to the proposed site, including highway numbers and street names, if applicable, with the telephone number of the person who prepared the directions.

6. The lease or sale agreement for the property on which the tower is proposed to be located, except that, if the agreement has been filed in abbreviated form with the Boyd County Clerk, an applicant may file a copy of the agreement as recorded by the county clerk and, if applicable, the portion of the agreement that specifies, in the case of abandonment, a method that the utility will follow in dismantling and removing the proposed cellular antenna tower including a timetable for removal.

7. The identity and qualifications of each person directly responsible for the design and construction of the proposed tower.

8. A (site) development plan or survey, signed and sealed by a professional engineer registered in Kentucky, that shows the proposed location of the tower and all easements and existing structures within five hundred (500) feet of the proposed site on the property on which the tower will be located, and all easements and existing structures within two hundred (200) feet of the access drive, including the intersection with the public street system.

9. A vertical profile sketch of the tower, signed and sealed by a professional engineer registered in Kentucky, indicating the height of the tower and the placement of all antennas.

10. The tower and foundation design plans and a description of the standard according to which the tower was designed, signed, and sealed by a professional engineer registered in Kentucky.

11. A map, drawn to scale no less than one (1) inch equals two hundred (200) feet, that identifies every structure and every owner of real estate within five hundred (500) feet of the proposed tower.

12. A statement that every person who, according to the records of the property valuation administrator, owns property within five hundred (500) feet of the proposed tower or property contiguous to the site upon which the tower is proposed to be constructed, has been:

    a. Notified by certified mail, return receipt requested, of the proposed construction which notice shall include a map of the location of the proposed construction.

    b. Given the telephone number and address of the local planning commission; and

    c. Informed of his or her right to participate in the planning commission's proceedings on the application.

13. A list of the property owners who received the notice, together with copies of the certified letters sent to the listed property owners.

14. A statement that the chief executive officer of the appropriate and affected local government and legislative bodies (City of Ashland and Boyd County Fiscal Court) have been notified, in writing of the proposed construction.

15. A copy of the notice sent to the chief executive officer of the appropriate and affected local government and the legislative body (see #14).

16. A statement that:

    a. A written notice, of durable material at least two (2) feet by four (4) feet in size, stating that "Applicant proposes to construct a telecommunications tower on this site" and including the addresses and telephone numbers of the applicant and the planning commission, has been posted in a visible location on the proposed site; and

    b. A written notice, at least two (2) feet by four (4) feet in size, stating that "Applicant proposes to construct a telecommunications tower on this site" and including the addresses and telephone numbers of the applicant and the planning commission, has been posted on the public road nearest the site.

17. A statement that notice of the location of the proposed construction has been published in a newspaper of general circulation in the county in which the construction is proposed.

18. A brief description of the character of the general area in which the tower is proposed to be constructed, which includes the existing land use and zoning for the specific property involved.

19. A statement that the applicant has considered the likely effects of the installation on nearby land uses and values and has concluded that there is no more suitable location reasonably available from which adequate service to the area can be provided, and that there is no reasonably available opportunity to locate its antennas and related facilities on an existing structure (i.e., co-locate), including documentation of attempts to locate its antennas and related facilities on an existing structure, if any, with supporting radio frequency analysis, where applicable, and a statement indicating that the applicant attempted to locate its antennas and related facilities on a tower designed to host multiple wireless service providers' facilities or on an existing structure, such as a telecommunications tower or other suitable structure capable of supporting the applicant's antennas and related facilities.

20. A map of the area in which the tower is proposed to be located, that is drawn to scale, and that clearly depicts the necessary search area within which an antenna tower should, pursuant to radio frequency requirements, be located.

21. A grid map that shows the location of all existing cellular antenna towers and that indicates the general position of proposed construction sites for new cellular antenna towers within an area that includes:

    a. All of the planning unit's jurisdiction; and

    b. A one-half (1/2) mile area outside of the boundaries of the planning unit's jurisdiction, if that area contains either existing or proposed construction sites for cellular antenna towers.

B. <u>Application Fee</u>

An applicant for the construction of cellular antenna towers for cellular telecommunications services or personal communications services shall pay an application fee in the amount of $2,500 upon submission of an application. This fee includes review of the Planning Commission based upon the required development plan and review and issuance of a building permit.

C. <u>Processing of Application</u>

The procedure for siting of Cellular Antenna Towers shall be as follows:

1. After an applicant's submission of the application to construct a cellular antenna tower, the Planning Commission shall:

a. In a public hearing, review the application in light of its agreement with the comprehensive plan and adopted zoning regulations;

b. Make its final decision to approve or disapprove the application; and

c. Advise the applicant in writing of its final decision within sixty (60) days commencing from the date that the application is submitted to the Planning Commission or within a date certain specified in a written agreement between the Planning Commission and the applicant. If the Planning Commission fails to issue a final decision within sixty (60) days and if there is no written agreement between the Planning Commission and the applicant to a specific date for the Planning Commission to issue a decision, the application shall be deemed approved.

2. If the Planning Commission disapproves of the proposed construction, it shall state the reasons for disapproval in its written decision any may make suggestions which, in its opinion, better accomplish the objectives of the comprehensive plan and the adopted zoning regulations. No permit for construction of a cellular or personal communications services antenna tower shall be issued until the Planning Commission approves the application or the sixty (60) day time period has expired, whichever occurs first.

3. The Planning Commission may require the applicant to make a reasonable attempt to co-locate additional transmitting or related equipment. The Planning Commission may provide the location of existing cellular antenna towers on which the commission deems the applicant can successfully co-locate its transmitting and related equipment. If the Planning Commission requires the applicant to attempt co-location, the applicant shall provide the local planning unit with a statement indicating that the application has:

    a. Successfully attempted to co-locate on towers designed to host multiple wireless service provider's facilities or existing structures such as a telecommunications tower or another suitable structure capable of supporting the applicant's facilities, and that identifies the location of the tower or suitable structure on which the applicant will co-locate its transmission and related facilities; or

    b. Unsuccessfully attempted to co-locate on towers designed to host multiple wireless service provider's facilities or existing structures such as a telecommunications tower or another suitable structure capable of supporting the applicant's facilities and that:

        i. Identifies the location of the towers or other structures on which the applicant attempted to co-locate; and

        ii. Lists the reasons and document why the co-location was unsuccessful in each instance.

4. The Planning Commission may deny an application to construct a cellular antenna based on an applicant's unwillingness to attempt to co-locate additional transmitting or related equipment on any new or existing towers or other structures.

5. In the event of co-location, a utility shall be considered the primary user of the tower, if the utility is the owner of the antenna tower and if no other agreement exists that prescribes an alternate arrangement between the parties for use of the tower. Any other entity that co-locates transmission or related facilities on a cellular antenna tower shall do so in a manner that does not impose additional costs or operating restrictions on the primary user.

6. Upon the approval of an application for the construction of a cellular antenna tower by the Planning Commission, the applicant shall notify the Public Service Commission within ten (10) working days of the approval. The notice to the Public Service Commission shall include a map showing the location of the construction site. If an applicant fails to file notice of an approved application with the Public Service Commission, the applicant shall be prohibited from beginning construction on the cellular antenna tower until such notice has been made.

7. A party aggrieved by a final action of the Planning Commission under the provisions of KRS 100.985 to 100.987 may bring an action for review in any court of competent jurisdiction.

IX.6 Regulations for Small Cell Towers and Facilities

A. Application Requirements

Applications for the construction or installation of small wireless facilities and/or small cell towers shall include the following:

1. Applicant's name, address, telephone number, e-mail addresses.

2. The names, addresses, telephone numbers and e-mail addresses of all duly authorized representatives and consultants, if any, acting on behalf of the applicant with respect to the filing of the application.

3. Applicant shall provide a map of the proposed site(s) and photographs of the structure if the installation is a proposed co-location. Applicants' map shall show all land uses within eight hundred (800) feet of the proposed small cell facility or tower.

4. Applicant shall provide a photo simulation showing the proposed small cell facility and any related equipment.

5. Applicant shall furnish site plan, plans, and elevations drawn to scale that identify the proposed small cell facility and all structures on which facilities are proposed to be located.

6. For new small cell towers, a site development plan, signed and sealed by a professional engineer registered in Kentucky, showing the proposed location of the new small cell tower(s) and existing structures within five hundred (500) feet of the proposed new small cell tower(s).

7. For new small cell towers, a vertical profile drawing of the proposed new small cell tower(s), signed and sealed by a professional engineer registered in Kentucky, indicating the height of the proposed new small cell tower(s) and the placement of all antennas and equipment enclosures associated with the new small cell tower(s).

B. Application Fee

1. The fee shall not exceed $500 for an application covering up to five (5) small wireless facilities, with an additional $100 for each additional small wireless facility beyond five.

2. The application fee for the installation, modification, or replacement of a new pole (i.e., not a co-location with other non-small cell facilities) intended to support one or more small wireless facilities shall not exceed $1,000 per pole.

3. An Applicant authorized to place small wireless facilities and any related poles in the right-of-way shall pay to the City compensation for use of the rights-of-way an aggregate annual rate not to exceed $270 per small wireless facility. This rate, together with the application fee(s), shall be the total compensation that the Applicant is required to pay the City for the deployment of each small wireless facility.

C. Processing of Application

Staff shall review an application subject to this Article considering its conformity with applicable provisions of this Article.

1. For an initial application, Staff shall notify the Applicant within ten (10) calendar days from the submission of the application if the application is materially incomplete. In the written notice, Staff must clearly and specifically identify all of the missing documents or information. No further review of the application will take place until the application is complete.

2. Staff shall review and take final action on applications for non-tower wireless communication facilities within sixty (60) calendar days of a completed application. Staff shall either approve, approve with conditions, or deny the application. If Staff does not make a final decision within the required sixty (60) calendar days, the application shall be deemed to be approved as submitted.

3. Planning Commission shall review and take final action on applications for new Small Cell towers within ninety (90) calendar days of a completed application. Planning Commission shall either approve, approve with conditions, or deny the application. If the Planning Commission does not make a final decision within the required ninety (90) calendar days, the application shall be deemed to be approved as submitted.

4. The applicant must be advised in writing of the final decision of either Staff or the Planning Commission. If the final decision is to deny the application, the final decision document shall state the basis for a denial, including specific code provisions on which the denial was based, and send the documentation to the applicant on or before the day the application is denied.

IX.7 Small Cell Wireless Facility and Small Cell Tower Location and Design Regulations

A new Small Wireless Facility is subject to design review and approval by the Planning Commission, either by Staff for Small Wireless Facilities on existing structures or after a public hearing, by the Planning Commission Board for new Small Cell Towers. The design criteria required for the new Small Wireless Facility is determined by the type of location or zoning district in which the facility is to be located. The design review and approval process, including any public hearing, shall be compliant with state and federal law.

A. Non-tower Wireless Communications Facilities Locations and Small Wireless Facilities on Existing Utility Poles or Small Cell Towers

Administrative review by Staff is required for Non-Tower Wireless Communications Facilities and Small Wireless Facilities on existing Utility Poles or Small Cell Towers. A Utility planning to erect said Non-Tower Wireless Communications Facilities and Small Wireless Facilities on existing Utility Poles or Small Cell Towers shall file an Application in accordance with Section IX.6, A of this Article.

B. New Small Wireless Facilities and Small Cell Locations in All Zoning Districts

The regulations in this subsection apply to all new Small Wireless Facilities and Small Cell Towers.

1. Except when deployed in response to temporary service outages; as a result of emergencies; or at the request of first responders, temporary, mobile or wheeled Cellular Antenna Towers or Small Cell Towers shall not be permitted.

2. New Small Cell Towers shall not exceed the greater of the maximum building height for the zoning district (or adjacent zoning district if in Right-Of-Way) within which they are located or thirty-five (35)'-feet. A height that is in excess of what is permitted within the zoning district may be approved by staff if it integrates Stealth Technology that better meets the objectives of these regulations.

3. If technologically possible, new Small Cell Towers shall be designed and constructed to accommodate a minimum of two (2) service providers.

4. New Small Cell Towers may be located on public or private nonresidential land or within a public Right-Of-Way provided it does not interfere with other utilities, functionality of sidewalks, visibility, or other matters of public safety.

5. New Small Cell Towers shall not be illuminated, except in accord with state or federal regulations, or unless illumination is integral to the Stealth Technology, such as a design intended to look like a street light pole.

6. New Small Cell Towers shall not include advertisements and may only display information required by a federal, state, or local agency. Such display shall not exceed one (1) square foot in area, unless required by state or federal regulations, or unless a larger display is integral to the Stealth Technology. Such display shall not exceed the width of the pole, unless required by state or federal regulations or a wider sign is integral to the Stealth Technology such as a design which integrates a decorative banner.

7. If a new Small Cell Tower is located in an area with primarily Underground Utilities, or where no adjacent Overhead Utility lines exist, it shall not utilize Overhead Utility lines.

C. New Small Wireless Facilities and Small Cell Towers Locations in Residential Zones

The regulations in this subsection apply to Small Cell Systems and Small Cell Towers to be located within, or immediately adjacent to, residential zoning districts as defined in Article I, Section 6.

1. Facilities in residential areas are strongly encouraged to be Non-Tower Wireless Communication Facilities, which are eligible for Staff approval from these regulations per Article IX, Section 7, A.

2. New Small Cell Towers and Small Wireless Facilities shall be camouflaged by Stealth Technology. Examples of appropriate Stealth Technology for residential areas includes, at a minimum, towers with all cables, wires, Transmission Equipment, electric meters, power equipment, etc. installed inside the Small Cell Tower to the extent technologically feasible. Other types of stealth technology or other methods which will reduce the visual impact may be approved by Staff.

3. All poles and antennas shall be uniform grey or black in color, unless another color is integral to the Stealth Technology as approved by Staff or the Applicant shows that grey and black are not technologically feasible.

4. The use of cooling fans is discouraged. When needed, fans with lower noise profiles must be used.

5. New Small Cell Towers should avoid areas without Overhead Utilities. If a Small Cell Tower is located in an area with primarily Underground Utilities it must adhere to Stealth Technology that incorporates the telecommunications equipment into a streetscape amenity such as a decorative lamp post, streetlight or other approved design. In areas with Overhead Utilities, cylindrical antennas or antennas house within cylindrical cannisters or shrouds are required.

6. In residential areas, a Small Cell Tower shall not be located closer than the height of the proposed tower to an existing or proposed residential structure, or no closer than thirty (30) feet, whichever is greater.

7. Efforts should be made to locate new Small Cell Towers in the yard location where other Overhead Utilities are located, in the event that Co-location has been demonstrated to be infeasible.

8. New Small Cell Towers within residential areas should be located to avoid obstructing the view of building facades by placing the tower at a corner, intersection or along a lot line.

9. When technologically feasible new Small Cell Tower shall not be located within five hundred (500) feet of an existing Small Cell Tower. Multiple carriers are permitted and encouraged to locate on one Small Cell Tower, where technologically feasible.

10. Reasonable efforts shall be made to locate new Small Cell Towers in the order of hierarchy below, based on the following functional roadway classification from the most to least preferred:

    a. Interstate
    b. Arterial
    c. Collector
    d. Local

D. New Small Wireless System and Small Cell Tower Locations in Non-Residential Zones

The regulations in this subsection apply to towers to be located within non-residential zoning districts.

1. In instances where a facility is proposed to be constructed in the Right- Of-Way within one hundred (100) feet of a residential zone or use, even if the antenna's physical location is within a non-residential zone, regulations in subsection 7, C., shall be followed.

2. Antennas in commercial, institutional, or park areas are encouraged to be installed as Non-Tower Wireless Communication Facilities, which are eligible for Staff approval per Article IX, Section 7, A.

3. Reasonable effort shall be given to locate new equipment based upon the following hierarchy of zones and land uses from the most to least preferred:

    a. Co-locate on an existing structure whenever possible.
    b. Institutional
    c. Industrial
    d. Commercial
    e. Public Parks

4. Equipment enclosures, including electric meters, should be nearly the same width as the pole or as small as possible.

5. Shrouds, risers, and conduits shall be used to reduce the appearance of external cabling.

6. All poles, antennas, brackets, cabling, risers, shrouds, and conduits shall be uniform grey or black in color, or other color as approved by Staff.

7. All poles, antennas, brackets, cabling, risers, shrouds, and conduits shall be uniform grey or black in color, or other color as approved by Staff.

8. There shall be no more than a four (4) inch off-set between the pole and pole-mounted equipment enclosures.

E. Evaluation Criteria

Evaluation of the proposal shall be based upon the following criteria and shall be subject to administrative approval by Staff or approval by the Planning Commission after a public hearing, as applicable:

1. The extent to which the proposal is consistent with the purposes of these regulations.

2. The extent to which the proposal minimizes the impact on adjacent land uses, especially in terms of visual impact.

3. The extent to which the proposed facility is camouflaged (i.e., use of Stealth Technology).

4. The extent to which the proposed facility conforms to the character of the surrounding area (i.e., buildings, street lighting, signs).

F. Amendments to Approved Plans

Any amendments to plans for Small Wireless Facilities and Small Cell Towers, except for the minor adjustments outlined below, shall be made in accordance with the procedure required in Section X.6, A, subject to the same limitations and requirements as those under which such plans were originally approved.

The following activities shall be considered minor adjustments from the original approval of an application for towers located in the Right-Of-Way. Changes are measured cumulatively from the original approval of the Small Cell Tower or Small Wireless Facility.

1. Tower height increases by less than ten (10) percent.

2. Change in the tower width of less than ten (10) percent.

IX.8 Confidentiality of Applications

All information contained in any application for a cellular antenna tower or small cell tower and/or facility, except for any map or other information that specifically identifies the proposed location being reviewed, shall be deemed confidential and proprietary within the meaning of KRS 61.878. The Planning Commission or Staff shall deny any public request for the inspection of this information, whether submitted under Kentucky's Open Records Act or otherwise, except when ordered to release the information by a court of competent jurisdiction. Any person violating this subsection shall be guilty of official misconduct in the second degree as provided under KRS 522.030. The confidentiality of any applications can be waived by the written authorization of the applicant.

ARTICLE X
ADMINISTRATION AND ENFORCEMENT

X.1 Zoning Enforcement

The City Zoning Administrator or authorized agent is hereby authorized to enforce the provisions of this Ordinance. Appeal from the decision of the Zoning Administrator may be made to the Board of Zoning Adjustment. In administering the provision of this Ordinance, the Zoning Administrator shall:

a. Make and maintain records of all applications for permits and requests listed herein, and records of all permits issued or denied, with notations of all special conditions or modifications involved.

b. File and safely keep copies of all plans submitted; and the same shall form a part of the records of this office and shall be available for inspection at reasonable times by any interested person.

c. Transmit to the appropriate Board or Commission all applications and plans for which their review and approval is required.

d. Conduct inspections of premises and, upon finding that any of the provisions of this Ordinance are being violated, notify in writing the person responsible for such violations, indicating the nature of the violation and ordering the action necessary to correct it.

X.2 Relation to Other Permits, Certificates and Licenses

a. Building Permit
No building or other construction permit shall be issued for any action unless in conformity with this Ordinance.

b. Certificate of Occupancy
No certificate of occupancy required by the Kentucky Building Code or this Ordinance shall be issued for any action not in conformity with this Ordinance.

c. No building, grading, or other construction/development permit shall be issued until such time as the site development plan required by this Ordinance has been reviewed and approved by the Zoning Administrator. Upon approval of such permit, any person performing the work covered by the permit shall post such permit on the premises until a certificate of occupancy have been issued.

X.3 Enforcement

a. Violations
If the Zoning Administrator finds that any of the provisions of this Ordinance are being violated, he (she) shall notify in writing the person(s) responsible for such violation, indicating the nature of the violation and ordering the action necessary to correct it. He (she) shall order the discontinuance of illegal uses of land, buildings, or structures; the

removal of illegal buildings or structures; the removal of illegal additions, alterations, or structural changes; discontinuance of any illegal work being done; or shall take any other action authorized by this Ordinance to ensure compliance with its provisions.

Any person may file a written complaint whenever a violation of this Ordinance occurs or is alleged to have occurred. Such a complaint stating fully the causes and basis thereof, shall be filed with the Zoning Administrator, who shall properly record the complaint, immediately investigate it, and take action as provided by this Ordinance. The Board of Zoning Adjustment is authorized to hear appeals and conduct administrative reviews of the Zoning Administrator's actions. See Sections X.4 and X.5.

b. Penalties

Any person or entity who violates any of the provisions of this Ordinance shall, upon conviction, be fined not less than ten (10) but not more than five hundred (500) dollars for each conviction. Each day of violation after notification shall constitute a separate offense.

Nothing contained herein shall prevent the city from taking such other lawful action as is necessary to prevent or remedy any violation.

c. Schedule of Fees, Charges and Expenses

The City Commission shall establish a schedule of fees, charges, and expenses and a collection procedure for permits, certificates, appeals, applications for amendment, approval of site development plans, conditional uses, and other matters pertaining to this Ordinance. The schedule of fees shall be posted in the Office of Zoning Administrator.

Until all applicable fees, charges and expenses have been paid in full, no action shall be taken on any application or appeal.

d. Forms and Procedures

The Planning Commission, Board of Zoning Adjustment, and other agencies having jurisdiction over various provisions of this Ordinance shall prepare forms and procedures as necessary for the expeditious administration of this Ordinance.

ARTICLE XI
BOARD OF ZONING ADJUSTMENT

XI.1 Establishment

The Board of Zoning Adjustment as constituted at the time of the adoption of this Ordinance shall continue in office with all powers granted herein. Future appointments shall be made as specified by the Kentucky Revised Statutes, Chapter 100.

XI.2 Powers, Duties and Rules of the Board

a. General

The Board of Zoning Adjustment (hereafter referred to as the "Board") shall have all of the powers and duties provided by Kentucky Revised Statutes and no others, except as specifically set forth in this or any other ordinance of the City of Ashland. The Board may establish rules of procedures, consistent with law, which may be necessary or convenient for carrying out its functions.

b. Proceedings

1. The Board shall conduct regular monthly meetings. Special meetings may be called as necessary. Procedures for regular and special meetings shall be consistent with state and local law.

2. A simple majority of the total authorized membership of the Board shall constitute a quorum. Any member of the Board, who has any direct or indirect financial interest in the outcome of any question before the Board, shall disqualify himself from deliberation and voting on the question.

3. The Board shall adopt bylaws for the transaction of business and shall keep minutes and records of all proceedings, including regulations, transactions, findings, and determinations, and the number of votes for and against each question, and if any member is absent or abstains from voting, indicating the fact, all of which shall be filed in records of the Board maintained by the Zoning Administrator and shall be available to the general public.

XI.3 Members' Liability

Members of the Board acting within the powers granted by this Ordinance and Chapter 100 of the Kentucky Revised Statutes are relieved from personal liability arising from the legal performance of their duties. Suits brought against members of the Board in their capacity as Board members shall be defended by a legal representative furnished by the City of Ashland until the final determination of the proceedings.

XI.4 Appeals

Appeals shall be to the Board and may be taken by any person or entity claiming to be injuriously affected or aggrieved by an official action or decision of the Zoning Administrator. Such appeal shall be taken within thirty (30) days after the appellant or his agent receives notice of the action appealed from, by filing with the Zoning Administrator and with the Board, a notice of appeal

specifying the grounds thereof, and giving notice of such appeal to any and all parties of record. The Zoning Administrator shall forthwith transmit to the Board all papers constituting the record upon which the action appealed from was taken and shall be treated as and be the respondent in such further proceedings. At any hearing by the Board any interested person may appear and enter his appearance, and all shall be given an opportunity to be heard.

The board shall fix a reasonable time for hearing the appeal and give public notice in accordance with state and local law, as well as written notice to the appellant and the administrative official at least one (1) week prior to the hearing, and shall decide it within thirty (30) days after the hearing. The affected party may appear at the hearing in person or by attorney.

XI.5 Administrative Review

The Board of Adjustment shall have the power to hear and decide cases where it is alleged by an applicant that there is error in any order, requirement, decision, grant, or refusal made by an administrative official in the enforcement of this Ordinance. Such appeal shall be taken within thirty (30) days of such order, requirement, decision, grant, or refusal.

XI.6 Conditional Use Permits

The Board shall hear and decide only such conditional use permit applications as specifically authorized by this Ordinance; to decide such questions as are involved in determining whether conditional uses should be granted; and to grant conditional uses with such conditions and safeguards as are appropriate under this Ordinance; or to deny conditional uses when they fail to comply with the provisions and requirements of this Ordinance.

XI.7 Variances

The Board shall have the power to hear and decide applications for dimensional variances where, by reason of the exceptional narrowness, shallowness, or unusual shape of a site on the effective date of the zoning regulations or by reason of exceptional topographic conditions, or some other extraordinary situation or condition of that site, the literal enforcement of the dimensional requirements (height or width of building or size of yards, but not population density) of the zoning regulation would deprive the applicant of reasonable capacity to make use of the land in a manner equivalent to the use permitted other landowners in the same zone. The Board may impose any reasonable conditions or restrictions on any variance it decides to grant.

a. A variance from the terms of this Ordinance shall not be granted by the Board unless and until a public hearing is held. Each application for a variance shall be upon forms provided by the Zoning Administrator.

b. Upon receipt of the application, the Zoning Administrator shall prepare a notice of public hearing to be posted on the property for which the variance is sought, duly advertised in a local newspaper, and mailed to all property owners within two hundred (200) feet of the applicant's property.

c. The Board of Zoning Adjustment shall find each and all of the following before a variance is granted:

1. There are specific conditions which are unique to the applicant's land and do not exist on other land in the same zoning district.

2. Strict application of the provisions of the Zoning Ordinance would deprive the applicant of reasonable use of the land in the manner equivalent to the uses permitted other landowners in the same zoning district.

3. The unique conditions and circumstances are not the result of actions of the applicant taken subsequent to the adoption of the Zoning Ordinance.

4. The variance will preserve, not harm the public safety and welfare, and will not alter the essential character of the neighborhood.

d. In granting any variances, the Board of Zoning Adjustment may prescribe appropriate conditions and safeguards in conformity with this Ordinance. The Board shall have power to revoke variances for noncompliance with the conditions thereof. Furthermore, the Board shall have a right of action to compel offending structures or uses removed at the cost of the violator.

e. When granted, a variance shall allow the least possible change in the Zoning Ordinance requirements.

f. The Board of Zoning Adjustment shall not grant any variance for any use expressly or by implication prohibited by the terms of this Ordinance. A change in the use requirements is a rezoning or text amendment, and thus a legislative matter. Likewise, no nonconforming use of neighboring lands, structures or buildings, and no permitted or nonconforming use of lands, structures, or buildings in other districts shall be considered grounds for the issuance of a variance.

XI.8 Nonconformity Permits

The Board shall have the authority to authorize Nonconformity Permits under the provisions of Article III.

XI.9 Appeals from the Board of Zoning Adjustment

Any person or entity claiming to be injured or aggrieved by any final action of the Board may appeal from the action to the circuit court. Such appeal shall be taken within thirty (30) days after the final action of the Board.

XI.10 Recording of Conditional Use Permits, Variances

All conditional use permits and variances approved by the Board of Zoning Adjustment shall be recorded in the Office of the Boyd County Clerk at the expense of the applicant, as required by the Kentucky Revised Statutes. Temporary conditional use permits, as allowed under Section XIII.3. of this Ordinance, are exempt from this provision.

BLANK PAGE

ARTICLE XII
AMENDMENT PROCEDURES

XII.1 Changes and Amendments

The City Commission may, on its own motion, upon recommendation of the Planning Commission, or upon petition by an interested person, amend, supplement, change, modify, or repeal the regulations or district boundaries established by this Ordinance. In no case shall final, action by the City Commission be taken on amending, changing, supplementing, modifying or repealing the regulations or district boundaries hereby established until a public hearing has been held by the Planning Commission at which parties in interest and citizens shall have an opportunity to be heard. Every proposed amendment, supplement, change, modification or repeal of this Ordinance shall be referred to the Planning Commission for its recommendation and report.

XII.2 Action by the Applicant

The petition of any interested person to amend the district boundaries or regulations established by this Ordinance shall be made on forms provided by the Zoning Administrator and shall include the following information:

a. A description and/or statement of the present and proposed regulations or district boundaries.

b. The names and addresses of the party or parties requesting (or parties to) the amendment. (Property owners in the case of a zoning map amendment).

c. In cases involving the amendment of a zoning district boundary, a currently accurate survey or tax map showing all parcels of land included in the petition, and a legal description of the property.

d. The names and addresses of persons owning land within two hundred (200) feet of the property for which a map amendment is sought.

e. The person or persons submitting a petition shall pay all expenses incurred by the City in the proper advertisement of the public hearing and administrative review of the application. Such fee shall be set by the City Commission.

XII.3 Action by the Planning Commission

Every proposed amendment, supplement, change, modification or repeal of this Ordinance shall be referred to the Planning Commission for its recommendation and report.

a. A petition to amend the district boundaries or regulations established by this Ordinance shall be considered by the Planning Commission at its next available agenda through a duly advertised and conducted public hearing.

b. The Planning Commission shall render its decision on any properly filed petition within sixty (60) calendar days after the public hearing of such petition and shall transmit its

recommendation and report, including the reasons for its determinations, to the City Commission.

XII.4 Action by the City Commission

The City Commission shall examine all such applications, reports, and recommendations transmitted to it and shall take such further action as it deems necessary and desirable. The City Commission shall approve or deny the proposed amendment to the Official Zoning Map or regulations subsequent to consideration of the Planning Commission recommendations regarding the proposed Official Zoning Map or regulations amendment.

XII.5 Reason for Amendment

a. This Ordinance, including the Official Zoning Map, is based upon, and is intended to implement, the Comprehensive Plan. Before any zoning map amendment is granted, the Planning and/or City Commission must find that the map amendment is in agreement with the Comprehensive Plan or, in the absence of such a finding, that one or more of the following apply (such findings shall be recorded in the minutes and records of the Planning Commission and/or City Commission.):

    1. That the original zoning classification given to the property was inappropriate or improper.

    2. That there have been major changes of an economic, physical, or social nature within the area involved which were not anticipated in the Comprehensive Plan and which have substantially altered the basic character of the area.

b. In addition to XII.5.a above, the Planning Commission and City Commission shall review proposed Zoning Ordinance and Map amendments with respect to sound land use planning principles and may approve or reject an amendment on such grounds.

XII.6 Withdrawal of Petition

Any petition submitted in accordance with provisions of Section XII.1 for the purpose of amending the regulations or district boundaries established by this Ordinance may be withdrawn at any time prior to City Commission final action.

XII.7 Reconsideration of Petition

Whenever a petition requesting a Zoning Map or Ordinance amendment has been denied, such petition, or other petition for the same area, (or similar proposal), shall not be considered again sooner than twelve (12) months after the date of denial, unless the City Commission, after considering the recommendation of the Planning Commission, shall find that there have been substantial changes in conditions or circumstances bearing on the petition.

XII.8 Effect of Amendment Petition on Building Permits

Whenever a petition requesting an amendment to the zoning boundaries or regulations is filed with the Zoning Administrator, no building permits or certificates of occupancy shall be issued for property within the affected area until the petition is acted upon by City Commission. Building permits and certificates of occupancy issued prior to the filing of a zoning boundary or regulations amendment petition shall not be adversely affected under this provision. The Zoning Administrator shall issue permits and certificates of occupancy for property within such an affected area when it is clear that the structure or use is permitted under the provisions of both the existing and petitioned zoning district or regulations. Projects under development may be completed, and certificates of occupancy issued, when a valid building permit was issued prior to filing of a zoning boundary or regulation amendment petition.

BLANK PAGE

ARTICLE XIII
CONDITIONAL USES

XIII.1 Objective and Purpose

a. The Zoning Ordinance is based on the division of the City into districts which the use of land and buildings, and the bulk and location of structures in relation to the land are substantially uniform. It is recognized, however, that there are some land uses which are basically in keeping with the intent and purpose of the district, but which may have an impact on the area around them which can only be determined by review of the specific proposals. These uses may be established, under certain conditions and with proper controls on site development, in such a manner as to minimize any adverse effects. In order to ensure that these uses, in their proposed location, would be compatible with surrounding development and in keeping with the purpose of the district in which they are located, their establishment shall not be as a matter of right, but only after review and approval of a conditional use permit application.

b. The uses for which conditional use permits are required are listed in the Table of Permitted and Conditional Uses, Section XIV.13. A description of the procedures and standards which must be followed in the issuance of a permit are detailed in the table of Regulations for Conditional Uses, Section XIII.3. Should any interpretation conflict arise between these two sections, Section XIV.13 shall be followed.

XIII.2 Procedure for Approval of Conditional Use Permits

a. A Conditional Use Permit may be issued by the Board of Zoning Adjustment for uses designated in the Table of Permitted and Conditional Uses, Section XIV.13. Prior to rendering a decision on the issuance of a Conditional Use Permit, the Board of Zoning Adjustment shall hold a public hearing. Each application for a Conditional Use Permit shall be made upon forms provided by the City.

b. Upon receipt of the application, The Zoning Administrator shall prepare a notice of a public hearing to be posted on the property for which the Conditional Use Permit is sought; and duly advertised in a local newspaper. The Zoning Administrator shall review all applications and present his (her) recommendations to the Board of Zoning Adjustment. Other applicable agencies may be asked to comment on the application prior to the public hearing. The Zoning Administrator shall also notify by mail all property owners within two hundred (200) feet of the applicant's site with notice of the public hearing.

c. Either the applicant or a designated agent shall present the proposal and its merits at the public hearing.

d. A Site Development Plan as detailed in Article VIII is required prior to Board action on a Conditional Use Permit application. Such plan shall be approved by the Board as to the general design, and standards listed in this Article. The Zoning Administrator shall conduct a technical review as to the provisions of Article VIII prior to the Board hearing.

e. After the public hearing where the applicant, supporting, and opposing testimonies are heard, the Board of Zoning Adjustment may grant or deny the Conditional Use Permit requested. The Conditional Use Permit, if granted, shall include approval of such plans as may be required. In granting the permit, the Board of Zoning Adjustment shall find each and all of the following.

1. A statement of the factual determination by the Board of Zoning Adjustment which justifies the issuance of the permit; and

2. A statement of the specific conditions, which must be met in order for the use to be permitted.

3. That the location and character of the use, if developed according to the plan as submitted and as approved, will be in conformity with the City Comprehensive Plan.

f. The Board of Zoning Adjustment may approve, modify, or deny any application for a Conditional Use Permit. If it approves such permit, the Board may attach necessary conditions to render the proposed use more compatible with the area in which it is to be located. Any such conditions shall be recorded in the Board's minutes and on the Conditional Use Permit. All conditions shall run with the land (except in the case of temporary permits, the duration of which shall be stated within the conditions). Such conditions may not relax the adopted standards in Section XIII.3, but may be more restrictive or in addition thereto.

g. The Board of Zoning Adjustment shall have the power to revoke Conditional Use Permits for noncompliance. Furthermore, the Board shall have a right of action to compel offending structures or uses removed at the cost of the violator.

h. The Zoning Administrator shall review all Conditional Use Permits, except those for which all conditions have been permanently satisfied, at least once annually in order to ascertain that the landowner is complying with all of the conditions listed on the permit.

If the landowner is not complying with all the conditions, the Zoning Administrator shall report the fact to the Board of Zoning Adjustment and the landowner, specifying the noncompliance. The Board shall hold a public hearing on the report, with notice of the hearing furnished to the landowner at least one (1) week in advance. If the Board finds such noncompliance, it may authorize the Zoning Administrator to revoke the Conditional Use Permit and take the necessary legal action to cause the termination of the activity.

XIII.3 Regulations for Conditional Use Permits

The uses for which Conditional Use Permits are required and detailed regulations and standards for the conditional uses governed by this Article are set forth in this Section XIII.3. In addition to the requirements contained herein, conditional uses shall comply with the area, height, parking, and other regulations applicable in the zoning district in which they are located, unless specifically covered by the following standards or by conditions attached by the Board of Zoning Adjustment.

a. Adult Uses

1. Permitted Districts: Adult uses may be permitted as a conditional use in the B-3 zoning district.

2. Dimensional Requirements: Adult uses shall comply with dimensional requirements of the district in which the use is located.

3. Parking and Loading: Off-street parking and loading requirements shall comply with Articles V and VI, respectively.

4. Landscaping and Buffers: Landscaping and buffers shall be provided as required in Article IV.

5. Other Standards:

   a. No adult use may operate within three hundred (300) feet of any residential zone.

   b. No adult use may operate within three hundred (300) feet of any public, private, or parochial school, library, park, playground, church, or other places where minors tend to congregate.

   c. No adult use may operate within a three hundred (300) foot radius of two (2) other such uses.

   d. Advertisements, displays, or other promotional materials shall not be shown or exhibited so as to be visible to the public from public right-of-ways or from public/semi-public pedestrian walkways. Such displays shall be considered as signs. Permitted signs shall be limited to those whose copy includes only the name of the business, place, organization, building, or person it identifies; and the size and location of such signs are controlled by Ordinance 21, 2012.

b. Animal/Pet Boarding, Kennel

1. Permitted Districts: Pet boarding may be permitted as a conditional use in the B-2, and I-1 zoning districts.

2. Dimensional Requirements: The boarding of pets shall comply with the dimensional requirements of the district in which the facility is located; provided, however, that no pen, run or other enclosure for animals be closer than one hundred (100) feet from the property lines.

3. Parking and Loading: Off-street parking and loading requirements shall comply with Articles V and VI, respectively.

4. Landscaping and Buffers: Landscaping and buffers shall be provided as required in Article IV. Buffers shall effectively screen the operation from view of adjustment residence.

c. Art Gallery, Museum

1. Permitted Districts: Art galleries and museums may be permitted as conditional uses in the R-5 and R-4 zoning districts.

2. Dimensional Requirements: Art galleries and museums shall comply with the dimensional requirements of this district in which it is located.

3. Parking and Loading: Off-street parking and loading requirements shall comply with Articles V and VI, respectively.

4. Landscaping and Buffers: Landscaping and buffers shall be provided as required in Article IV.

5. Other Requirements:
The applicant shall submit with the site plan a narrative description of the proposed use, detailing: hours of operation, provision of studios, presence of retail sales activity, character of proposed events and exhibits, and anticipated number of visitors, employees, and volunteers.

d. Bed and Breakfast

1. Permitted districts: Bed and Breakfast operations may be permitted as a conditional use in the R-5 zoning district only.

2. Dimensional requirements: the dimensional requirements for this use shall be the same as for the zoning district in which the property is located, as indicated in the Table of Dimensional Requirements, Article XIV.14, unless provided otherwise herein.

3. Parking and Loading: Off-street parking and loading requirements shall be in compliance with Articles V and VI respectively.

4. Landscaping and Buffers: Landscaping and buffers shall be provided as required by Article IV. In addition, the Board of Zoning Adjustment may require a vegetative buffer strip or screen where this proposed operation abuts low density existing or future housing.

5. It is the intent of this conditional use to provide a buffer between intense land uses and low density single-family residences. To that extent the Board of Zoning Adjustment may permit conditionally bed and breakfast operation at the fringe of low density residential zones where it abuts more intense and/or incompatible land uses. The Board may further permit such operations near the intersection of two

major streets where highway traffic may not be conducive to single family residential development.

6. Other Requirements: No more than one bed and breakfast operation shall be located on a single zoning lot. Bed and Breakfast operation permitted under this subsection shall have no more than one structure on a single zoning lot. No bed and breakfast operation permitted under this subsection shall have more than four (4) units per structure.

7. Each room to be rented shall be designed and intended to accommodate no more than two persons;

8. Each room shall be rented for no longer than seven (7) consecutive days. Any facility which rents rooms for more than seven days shall be regulated as a boarding house;

9. The resident owner-operator shall maintain a guest log and other records, which shall be subject to annual review and inspection;

10. The conditional use permit shall become null and void upon the sale or transfer of the property;

11. The use shall be in compliance with all applicable state and local laws, including Health Department rules and regulations.

e. Beekeeping Operations

1. Permitted Districts: Beekeeping operations may be permitted as a conditional use in all residential zoning districts.

2. Dimensional Requirements:

a. Hives may be located only on lots with residential use.

b. No more than four (4) hives may be located on a lot.

c. No hive shall exceed twenty (20) cubic feet in volume.

d. No hive shall be located closer than ten (10) feet from any property line.

e. No hive shall be located closer than (20) feet from a public sidewalk or twenty-five (25) feet from a principal building on an abutting lot.

f. A constant supply of water shall be provided for all hives.

g. A flyway barrier at least six (6) feet in height shall shield any part of a property line that is within twenty-five (25) feet of a hive. The flyway

barrier shall consist of a wall, fence, dense vegetation or a combination thereof and it shall be positioned to transect both legs of a triangle extending from an apex at the hive to each end point of the part of the property line to be shielded.

h. A swarm trap shall be installed on the property from April 1 through October 31 of each year.

3. Parking and Loading: Off-street parking and loading requirements shall comply with Articles V and VI, respectively.

4. Landscaping and Buffers: Landscaping and buffers shall be provided as required in Article IV. Buffers shall effectively screen the operation from view of adjacent residence(s).

f. Cemetery

1. Permitted Districts: Cemeteries may be permitted as conditional uses in all zoning districts.

2. Lot Size: A cemetery shall contain at least fifteen (15) acres of land.

3. Building Height: No structure shall exceed thirty-five (35) feet in height.

4. Structure Location: No structure permitted by these standards shall be located closer than one-hundred (100) feet to any abutting residential structure, or any structure for routine occupancy.

5. Access: There shall be at least one (1) access point to a cemetery. Such access shall be by way of a private drive entering from a public street and of sufficient width to accommodate two-way vehicular traffic. A gate or other means of closing the entrance shall be provided.

6. Landscaping and Buffers: A perimeter buffer strip of fifty (50) feet shall be maintained around the entire cemetery. No burial sites, decorations, or structures shall occupy this buffer strip.

7. Hours of Operation: Cemeteries shall be open only during daylight hours. The entrance shall be closed and locked at night.

8. Structures Permitted: Chapels, mortuaries, undertaking establishments, crematoriums, mausoleums, and sales and administrative offices are permitted within a cemetery.

g. Data Centers

1. Permitted Districts and Uses:

a. A Data Center shall be eligible for consideration only as a Conditional Use in the I-2 zoning district and only upon compliance with every requirement of this subsection, the approved site development plan, and all conditions imposed by the Board of Zoning Adjustment.

b. Data Centers shall be prohibited in all other zoning districts.

c. The application and approval shall encompass the entire Data Center Site and the maximum proposed full-buildout capacity of all phases. A Data Center shall not be classified or approved as electronic data processing, an office, a telecommunications use, a public utility station, an accessory use, or an industrial operation not otherwise listed.

d. The total gross floor area of the building or buildings housing servers, data processing equipment, or computer racks (the "Server Building") shall not exceed fifty thousand (50,000) square feet at full buildout, inclusive of all mezzanine levels, raised-floor areas, and other elevated floor plates. This limitation shall not apply to Data Center Supporting Infrastructure, including but not limited to electrical substations, switchgear, transformers, backup generators, fuel storage facilities, battery energy storage systems, cooling towers, chillers, water storage tanks, or other mechanical, electrical, or utility equipment and structures necessary to support the Server Building's operation. For purposes of the fifty-thousand-square-foot limitation, gross floor area shall be aggregated across all Server Buildings, phases, parcels, and additions under common ownership, control, management, or operation with the Data Center Site, regardless of whether such additions are proposed under a separate permit or filed as a distinct project.

e. The Server Building shall occupy the entirety of any building in which it is located. No building containing the Server Building shall include office, retail, residential, warehousing, or other uses unrelated to the direct operation, monitoring, or maintenance of the Data Center. Data Center Supporting Infrastructure may be located in separate, freestanding structures on the Data Center Site.

2. Application Requirements: The application for a conditional use permit shall include:

a. A proposed site development plan identifying:

i. The zoning classification for all lands within 1 mile of the external perimeter property lines of the proposed Data Center Site;

ii. The legal boundaries of each separate parcel comprising the proposed site;

iii. Proposed access route(s) and access control to the site;

iv. The location of proposed improvements including but not limited to the Data Center, Data Center Supporting Infrastructure, parking, lighting, screening/buffering, and perimeter fencing;

v. Existing or proposed utilities providing electric, gas, water, and wastewater service to the facility;

vi. Evidence of compliance with all applicable setback requirements;

vii. Location of the 100-year floodplain, wetlands, public rights-of-way, and cultural and historic resources on the proposed Data Center Site and within 500 feet of the external perimeter property lines.

b. A traffic study assessing the impact of the facility construction and operation on road and rail traffic to and within the facility;

c. A Utility and Infrastructure Plan meeting the requirements of Section 6;

d. A Water and Wastewater Management Plan meeting the requirements of Section 7;

e. A Noise Assessment, Monitoring and Mitigation Plan meeting the requirements of Section 10;

f. A Waste Management Plan which shall identify all categories of solid waste, electronic waste, hazardous materials, and other refuse generated by the facility, including packaging, cooling system by-products, and equipment replacement materials, and shall identify the manner in which the wastes will be stored, collected, processed, recycled, and disposed;

g. A Fire and Emergency Response Plan which shall identify fire, explosion, thermal-runaway, toxic-gas, fuel, electrical, confined-space, and water-supply hazards; emergency shutdown and isolation procedures; firewater and contaminated-runoff containment; evacuation and shelter procedures; twenty-four hour contacts; responder access; specialized equipment; training; and annual coordination with the Fire Department and other emergency agencies;

h. The applicant shall identify all local, state, federal, utility, environmental, building, fire, air, water, wastewater, transportation, and other permits or approvals required and shall provide copies of applications, issued permits,

material agency correspondence, and final approvals upon request. Approval of a City of Ashland Conditional Use Permit shall not excuse compliance with another requirement;

i. A Decommissioning Plan meeting the requirements of Section 12.

3. Dimensional and Location Requirements:

a. All structures, buildings, maintenance equipment, ground located cooling, ventilation, or backup power generation equipment must be located at least 1,500 feet from the boundary of any residential zoning district.

b. Notwithstanding the general I-2 dimensional table, no Data Center building shall exceed forty-five (45) feet in height; total building coverage shall not exceed fifty percent (50%) of the Data Center Site; total impervious surface shall not exceed seventy percent (70%); and at least twenty percent (20%) of the Data Center Site shall be maintained as permanently landscaped open space. Rooftop mechanical equipment shall be screened by parapets or architectural screening and shall not extend more than ten (10) feet above the roofline.

c. No Data Center, Data Center Supporting Infrastructure, generator, battery energy storage system, fuel-storage facility, or hazardous-material storage area shall be located within a regulatory floodway, wetland, or area of documented geologic instability. Development within a special flood-hazard area shall satisfy all floodplain requirements, include an engineer-certified no-rise or compensatory-storage analysis as applicable, and locate critical equipment above the required flood-protection elevation. The application shall identify slopes exceeding twenty percent (20%), wetlands, floodplains, wellhead-protection areas, known contamination, and geotechnical hazards and shall demonstrate avoidance or legally enforceable mitigation.

4. Parking, Loading, Access, and Traffic: A minimum of one (1) parking space per employee on the largest shift in addition to a minimum of three (3) visitor parking spaces shall be provided. The site shall provide sufficient internal queuing, loading, emergency access, and construction staging areas so that vehicles do not queue, park, load, or stage within a public right-of-way. The application shall include a construction and operational traffic plan identifying designated truck routes, delivery hours, anticipated vehicle trips, roadway and bridge limitations, emergency access, and measures to prevent damage or unreasonable disruption. Before construction, the applicant shall document the condition of City streets on the approved route and shall repair or reimburse the City for project-caused damage pursuant to a written agreement approved by the City.

5. Landscaping, Buffers, Screening, Fencing, and Lighting:

a. A minimum landscape buffer of twenty-five (25) feet shall be provided along every external perimeter boundary of the Data Center Site. The buffer shall contain a combination of preserved vegetation, staggered evergreen and deciduous trees, shrubs, berms, decorative opaque walls, and other screening that provides at least eighty percent (80%) year-round opacity. The effective screening height of trees or shrubs shall be at least four (4) feet in height at the time of planting and shall reach a height of at least eight (8) feet within five (5) growing seasons.

b. A minimum of one (1) tree shall be planted for each thirty (30) linear feet of external perimeter boundary, with not less than fifty percent (50%) of required trees being evergreen. Plantings shall be arranged in staggered groupings rather than a single uniform row.

c. All buffers may be situated within required setbacks.

d. The owner and operator of any Data Center shall have a continuing duty to ensure that all landscaping and screening standards and requirements are maintained on an ongoing basis. Failure to maintain required landscaping or screening shall constitute a continuing zoning violation.

e. Security fencing shall not substitute for landscaping. Chain-link, slatted chain-link, barbed-wire, or razor-wire fencing shall not be visible from a public street or external perimeter property line. Any perimeter fence shall be located behind required landscaping and shall comply with Fire Department access requirements.

f. All exterior lighting shall be full-cutoff and fully shielded, directed downward, and designed so illumination measured at any external perimeter property line does not exceed 0.1 footcandle. Pole-mounted luminaries shall not exceed twenty (20) feet in height. Except for minimum security and emergency lighting, exterior lighting shall be dimmed by at least fifty percent (50%) between 11:00 p.m. and 6:00 a.m.

6. Utilities and Infrastructure: Any conditional use application shall include a Utility and Infrastructure Plan, which shall include:

a. A site plan showing all structures and facilities to be used or constructed to support the Data Center operations, including all water, wastewater, electric, natural gas, and other infrastructure, and public utility service facilities.

b. Identification and description of any existing or proposed transmission lines and other facilities that would be required in order to connect the proposed facilities to the grid, and any permits or other approvals needed to support such construction.

c. Identification of any existing or proposed pipelines or gas transmission lines and other facilities that would be required in order to deliver natural gas or other gas or liquids to the facilities for use in heating or power generation.

d. A description of any power sources proposed to be constructed or sited and operated, including emissions profile, noise, copies of applications for any required state or federal air permits. Any energy generation system designed or used to supply power directly to a Data Center during normal operations, including solar, wind, fossil fuel, or other energy generating systems, shall not be considered part of the Data Center use. Such systems shall be considered a separate use and shall be approved only in accordance with any zoning regulations that allow and are applicable to such use.

e. Information concerning any proposed grid interconnection.

f. Documentation, including written verification from the applicable service providers, demonstrating that:

i. Public utility capacity and related electrical infrastructure sufficient in size and capacity is or will be made available to ensure that the power requirements of the proposed project can safely be accommodated without adverse effect on the availability, reliability, quality, or safety of the electric service to other customers;

ii. Any system designed for cooling and operation of the facility (whether by electricity, water, or other means) will meet all applicable standards of this ordinance as well as state and federal law;

iii. Water, stormwater, and wastewater management and treatment capacity sufficient in size and capacity is or will be made available to ensure that the requirements of the proposed project can be safely accommodated without adverse effects on the availability, reliability, quality, or safety of the water, wastewater, and stormwater management and treatment services to other customers; and

iv. Any enhancements or improvements required in order for such utility services to continue to be available without adverse effect to existing customers will be funded by applicant and in place before operation of the proposed project.

g. Demonstration that for any proposed battery storage or storage of any other device or group of devices capable of storing energy for supply at a later time, whether the energy is stored for use on-site or off-site, compliance with National Fire Protection Association (NFPA) Standard 855,

Installation of Stationary Energy Storage Systems, or similar standards, and include fire suppression systems designed specifically for battery storage.

h. All utility-owned or utility-operated facilities shall be disclosed. Nothing in this section shall be construed to regulate a service facility exempt from local zoning under KRS 100.234; however, all nonexempt facilities and all portions of the Data Center Site within the City's jurisdiction shall comply with this ordinance, and the applicant shall obtain every approval required by law.

7. Water Management: All Data Centers shall provide a Water and Wastewater Management Plan, which shall include:

a. Projected daily and peak water demand;

b. The source(s) of the water supply, including certification from any public or semipublic water supplier that it will supply the daily and peak water need and that the demand can be met without adverse effect on the availability, quality of service, potability of the water, or other qualitative or quantitative impacts on existing customers;

c. Certification that the Data Center site is not located within a wellhead protection planning area;

d. Provide documentation that the Data Center design and equipment has incorporated best available technology and best practices to minimize water waste, maximize efficiency of water use, and to reclaim and recycle water to the extent possible;

e. Provide documentation that any improvements to the water or wastewater utility infrastructure needed to serve the proposed Data Center will be paid by the applicant;

f. Avoid cooling system discharge into the wastewater system and, if needed, minimize discharge and provide pretreatment as required; and

g. Documentation of efforts to incorporate cooling systems that do not discharge to the wastewater or stormwater systems, or which use non-chemical and nonwater-based cooling.

8. Cooling Requirements:

a. All liquid cooled equipment must be designed to utilize a closed-loop system in which cooling fluid is recirculated and reused and is not discharged after a single pass through equipment. The term does not prohibit limited blowdown, purge, or maintenance discharge that is minimized, treated as required, separately metered, and lawfully discharged.

b. Water used for liquid cooling systems must come from a public or semi-public water system and not from any type of private well system.

c. Water discharge from liquid cooling systems shall only occur after treatment (if required) and only in accordance with all applicable local, state, and federal water pretreatment, discharge permit requirements and in conformity with state water quality standards.

d. A material change in cooling technology, cooling capacity, water source, chemical treatment, or projected water demand shall require prior approval as a Material Expansion or Modification.

9. Generator and Testing Requirements:

a. Backup power generation using diesel fuel, natural gas, or Battery Energy Storage Systems are allowed for use at a Data Center. If diesel generators are used, they shall be equal to or greater than the equivalent of Tier 4, pursuant to EPA standards.

b. Except for generator testing or commissioning activities, generator use shall be limited to backup and emergency use only when the primary source of electricity is interrupted or unavailable. Continuous generator use outside of power outages or interruptions is prohibited.

c. Generators shall be tested no more than once per week per unit, and only during the hours of 12 P.M. to 5 P.M. Monday through Friday. Testing shall be staggered so that no more than the minimum number of units necessary are operated simultaneously. Nonemergency testing and maintenance shall not exceed fifty (50) hours per calendar year per unit or any lower limit imposed by law or permit. Commissioning involving simultaneous or extended operation shall require at least ten (10) business days' advance notice to the City.

d. The owner shall maintain electronic records of the date, time, duration, purpose, fuel use, load, and emissions-control status of every generator operation and shall provide the records to the City upon request.

e. If diesel fuel is used for a back-up generator, the application shall include information demonstrating that the fuel will be delivered during non-peak daytime hours, that storage of the fuel will conform to all applicable fire and safety standards, and that the storage vessel is equipped with secondary containment to contain any release.

10. Noise:

a. Any conditional use application shall include a pre-construction noise analysis conducted by a certified/licensed acoustical engineer. The points

of measurement shall be shown on a site plan and shall be located on each external perimeter property line at locations selected as those most susceptible to noise from applicable proposed equipment.

b. Noise from operations, including primary and accessory structures and uses, shall not exceed 55 dBA when measured at any external property line.

c. In addition to the stated decibel limit, operations shall not generate vibration, oscillation, or infrasound that causes perceptible resonance within any buildings or adverse impacts on the human body, including but not limited to dizziness, headaches, nausea, sleep disturbance, or other recognized health effects. Compliance shall be determined based on standards issued by ANSI and ISO for human exposure to whole-body and low-frequency vibration and shall be measured at any external property line.

d. A post-construction noise analysis shall be conducted after Data Center operations have commenced and not more than ninety (90) days following the final certificate of occupancy, and annually thereafter for the operating life of the facility. Additional testing shall be performed at the operator's expense whenever the City receives a credible complaint or has reasonable cause to suspect noncompliance. In the event that any noise analysis identifies greater than maximum permissible sound levels at any perimeter property boundary, the operator shall immediately undertake all necessary efforts to mitigate any violation and if the operator refuses or fails to cure said violation the City may exercise all legal avenues available to obtain compliance.

11. Waste Heat:

a. No person, firm, or corporation shall cause, permit, allow, or maintain any artificial or mechanical source of heat, radiant energy, or exhaust that creates a condition of thermal discomfort, hazard, or damage to persons, animals, vegetation, or property beyond the external perimeter property lines of the Data Center.

b. Thermal discharge, venting, or exhaust from any equipment, machinery, or operation shall not raise the ambient temperature at any external perimeter property line above naturally occurring conditions when measured at a height of four (4) feet above ground level.

c. Outdoor equipment and energy systems must be equipped with shielding, insulation, or dispersion devices to minimize radiant heat impacts.

d. Exhaust from heating, ventilation, air conditioning, or industrial equipment shall be directed and diffused in such a manner as to prevent concentrated heat exposure to anywhere outside of Data Center, neighboring properties, or public rights-of-way.

e. Rooftop or wall-mounted heat exhaust systems shall be equipped with baffles, louvers, or dispersal devices to prevent heat plumes from causing discomfort or damage to adjacent buildings or damage to vegetation.

12. Decommissioning: Any conditional use application shall include a decommissioning plan, prepared by a registered professional engineer, containing the following:

a. The estimated decommissioning timeframe and cost of removal of all structures, foundations, conduit, equipment, and interconnection facilities, and roads;

b. The salvage value of any equipment in current dollars and the calculations supporting the decommissioning estimate. The estimated salvage value of the material using current, publicly available material indices and/or firm quotes from a decommissioning or recycling company experienced in the decommissioning of data centers shall be provided;

c. The manner in which the Data Center will be decommissioned, including provision and a timetable for the removal of all structures, foundations, conduit, equipment, and interconnection facilities and for the revegetation and restoration of the property to its original condition or preparation of the site in a condition compatible with the prior zoning of the parcel(s);

d. A performance bond, letter of credit, or other financial assurance payable to the City of Ashland, sufficient to assure that decommissioning of the site can be achieved by a third party in the event that the applicant defaults in that obligation, which financial assurance shall be provided prior to the commencement of construction.

e. Upon default, abandonment, failure to maintain security, or failure to complete decommissioning on schedule, the City may enter the property to inspect, stabilize, remove, remediate, and restore; draw upon the financial assurance; recover all costs exceeding the security; and impose a lien or pursue any other remedy authorized by law. The owner, operator, and landowner shall be jointly and severally liable for all obligations and costs. Abandonment occurs upon the permanent cessation of Data Center operations or the failure to conduct lawful Data Center operations for twelve (12) consecutive months, excluding a temporary shutdown approved in writing by the Zoning Administrator for maintenance, casualty restoration, construction, or another demonstrated temporary condition.

13. Material Expansion, Modification and Transfer: Any change that increases approved gross floor area, electrical demand, generator or energy-storage capacity, water demand, wastewater discharge, cooling capacity, emissions, equipment count, or external noise; adds a building, parcel, development phase, generator, cooling unit, battery system, substation, or fuel-storage facility; changes cooling

technology or the primary source of power; or otherwise has the potential to increase off-site impacts shall be considered a Material Expansion or Modification.

a. No Material Expansion or Modification shall occur without prior written determination by the Zoning Administrator and, when the change may increase off-site impacts or approved capacity, an amended conditional use permit. Phasing shall not be used to avoid cumulative review. The Board of Zoning Adjustment shall evaluate the cumulative impact of the existing facility and proposed change.

b. A change of ownership, operator, lessee, controlling interest, or responsible entity shall require at least sixty (60) days' advance notice to the City; written assumption of all permit conditions and agreements; updated emergency contacts and plans; replacement or confirmation of all financial assurance; and demonstration that the successor has the financial and technical capacity to comply. A transfer shall not release any prior owner or operator from accrued obligations or violations.

c. The conditional use permit shall authorize only the capacity, equipment, uses, parcels, and phases expressly approved. Any capacity not constructed and placed in lawful operation within the period established by the Board may expire unless an extension is approved after public review.

14. Process and Standards for Approval of Conditional Use Permit

a. The City shall have the authority to hire a consultant to review the Conditional Use Permit Application and all Plans and to provide recommendations concerning the compliance of the proposed facility with the applicable standards and requirements associated with the siting, construction, operation, and decommissioning of the Data Center and all accessory structures and facilities. Any expenses incurred by the City's hiring of a consultant shall be borne by the applicant. The expenses incurred may be charged against an escrow deposit charged to the applicant at the time of filing of the application.

b. A conditional use permit shall be issued by the Board only where the applicant demonstrates and the Board affirmatively finds, based on the evidence in the record taken as a whole, and after public notice and opportunity to be heard concerning the application, that all applicable requirements of this Ordinance have been or will be met regarding the location, construction, operation, and decommissioning of the Data Center and that issuance of the conditional use permit is consistent with the public health, safety, and welfare.

c. The Board may impose any conditions deemed necessary or appropriate in order to allow the proper integration of the proposed Data Center into the zone and location in which it is proposed, and deemed necessary or appropriate to protect public health, safety, and welfare. Such additional

conditions may include but are not limited to further limitations on noise, hours of operation, additional visual screening and buffering, traffic mitigation, setbacks, and infrastructure upgrades.

15. Continuing Compliance, Inspection, and Enforcement:

a. Compliance with this subsection, every approved plan, every written representation made by the applicant, and every condition of approval is a continuing condition of the conditional use permit. Each day of noncompliance shall constitute a separate violation.

b. The owner and operator shall submit an annual compliance certification signed by an authorized officer and supported by monitoring data. The certification shall address water use, wastewater discharge, electricity demand, generator operation, emissions, noise, lighting, landscaping, emergency incidents, complaints, permit status, and financial assurance.

c. The City and its authorized consultants may inspect the Data Center Site and review records upon reasonable notice, and without prior notice when an emergency, imminent threat, or reasonable evidence of a material violation exists. Operational testing, maintenance, monitoring, complaint, and incident records shall be retained for at least five (5) years and be produced upon request.

d. The City may require immediate curtailment, shutdown, evacuation, or corrective action when an operation presents an imminent threat to health, safety, utility reliability, the environment, or property. The City may recover reasonable inspection, testing, engineering, legal, emergency response, and enforcement costs attributable to the facility.

e. In addition to all remedies otherwise available, violation of this subsection or a permit condition may result in withholding or revocation of a certificate of occupancy, stop-work or cease-and-desist orders, civil penalties, injunctive relief, recovery of costs, drawing on financial assurance, and suspension, modification, or revocation of the conditional use permit after notice and hearing as required by law.

16. Conflict, More Protective Standard, and Severability:

a. These requirements are supplemental to all other applicable provisions of the Code and local, state, and federal law. When requirements conflict, the more protective requirements shall apply to the fullest extent permitted by law.

b. If any provision or application of this subsection is held invalid or unenforceable, the remaining provisions and applications shall remain in effect to the fullest extent possible.

h. Day Care Center, Nursery

1. Permitted Districts: Day care centers, and/or nurseries, may be permitted in all zoning districts.

2. Dimensional Requirements: A day care center/nursery shall comply with the lot, yard, and height requirements of the zoning district in which the facility is located.

3. Parking and Loading: Off-street parking and loading requirements shall comply with Articles V and VI, respectively.

4. Signs: Signs shall be in compliance with Ordinance 21, 2012.

5. Landscaping and Buffers: Where any outdoor play area is directly adjacent to a residential lot, a solid fence or wall at least six (6) feet, or an open fence at least four (4) feet in height with a screen planting of six (6) feet in height, shall be installed. Vegetative material shall meet the required height within two (2) growing seasons.

6. Other Requirements:

   a. There shall be twenty-five (25) square feet of indoor space for use per child. Closets, corridors, kitchens, and baths will be excluded in determining compliance with this requirement. (Floor plan required).

   b. There shall be seventy-five (75) feet of outdoor play area per child in residential districts, and forty-five (45) square feet per child in non-residential districts (Ord 144, 1990). The outdoor play areas shall be located in a fenced side or rear yard.

   c. Each day care center/nursery shall be duly licensed or certified by the Commonwealth of Kentucky, where applicable.

   d. An off-street area shall be provided where passengers may safely exit an automobile to enter the building, and vice versa.

i. Duplex and Multi-Family Dwelling

1. Permitted Districts: Duplex, small scale (one structure per lot and no more than 4 units) multi-family residential development may be permitted as a conditional use in the R-6 zoning districts.

2. Dimensional Requirements: The dimensional requirements for duplex and multi-family residential development, as a conditional use, shall be the same as those for the zoning district in which the property is located; as indicated in the Table of Dimensional Requirements, Article XIV.14.

3. Location within Zoning Districts:

a. It is the intent of this conditional use to provide a buffer between intense land uses and low density single-family residences. To that extent the Board of Zoning Adjustment may permit conditionally duplexes or multi-family dwellings at the fringe of low density residential zones where it abuts more intense and/or incompatible land uses. The Board may further permit such housing near the intersection of two major streets where highway traffic may not be conducive to single family residential development**.**

b. This conditional use is not intended to change the character of the R-6 zoning districts to one of higher density development. Therefore, such conditional use shall be allowed only for the single zoning lot, which abuts a land use incompatible with R-6 type developments. Thereafter, the permitted conditional use will be considered a compatible land use with the R-6 districts.

4. Parking and Loading: Off-street parking and loading requirements shall be in compliance with Articles V and VI, respectively.

5. Landscaping and Buffers: Duplex and multi-family development as a conditional use shall comply with the landscaping and buffer requirements of Article IV. In addition, the Board of Zoning Adjustment may require a vegetative buffer strip or screen where this proposed development abuts low density existing or future housing.

6. Other Requirements: No more than one duplex structure shall be located on a single zoning lot. Multi-family development permitted under this subsection shall have no more than one structure on a single zoning lot. No multi-family development permitted under this subsection shall have more than four (4) units per structure.

j. Dwelling, Multi-Family-Large Scale

1. Permitted Districts: Large scale multi-family dwelling developments (more than one structure and/or more than eight (8) units) may be permitted as a conditional use in the R-5, R-4 Residential and B-3 Downtown/Business zoning districts.

2. Dimensional Requirements: Large scale multi-family dwelling developments shall comply with the lot, yard, and height requirements of the district in which the development is located, unless otherwise provided herein or by the Board of Zoning Adjustment. The dimensional requirements shall apply to the entire development proposal rather than to only individual structures.

3. Parking and Loading: Off-street parking and loading requirements shall comply with Articles V and VI, respectively.

4. Landscaping and Buffers: Landscaping and buffering shall include a twenty (20) foot buffer strip adjacent to all railroad rights-of-way, limited access highways, and commercial and industrial uses or zoning districts. The buffer strip shall be planted

with evergreen or deciduous trees spaced not more than fifty (50) feet apart and supplemented with grass and shrubs to effectively screen the view of adjacent properties from the use(s) within the subject property. The Board of Zoning Adjustment may require additional landscaping to ensure a safe and healthy residential environment.

5. Other Requirements:

a. Individual structures shall be separated by at least thirty (30) feet end-to-end, and forty (40) feet in all other configurations.

b. No multi-family structure shall be more than two hundred (200) feet in length.

c. There shall be provided a minimum of three hundred (300) square feet of usable open space for each multi-family unit. Such open space shall be improved active and passive recreation area for the use of residents thereof.

Housing for the elderly or housing near public recreation sites may be exempt from the provision, upon a finding that residents' recreational needs are satisfied.

d. Roads: Private, hard surface, drives are permitted, when approved by the Director of Public Works. Individual structures or land uses need not front on a public street. Private drives shall allow for public safety vehicles to efficiently maneuver. The developer shall provide assurances, acceptable to the Board of Zoning Adjustment, that the owner, homeowners association, or agent thereof, will assume maintenance responsibilities for all private drives. The City will not accept any road into its system unless it meets City street standards.

e. Utilities: Utilities, including storm sewers, sanitary sewers, refuse collection, and water system shall be approved by the Directors of Public Works and Utilities, and shall be designed by a registered engineer. As-built drawings of the facilities will be required where the utilities are to be dedicated to, and accepted by, the City. The developer shall provide assurances, acceptable to the Board of Zoning Adjustment, that the owner, homeowners associations, or agent thereof, will assume maintenance responsibilities for all private utility systems.

k. Dwelling, Townhouse

1. Permitted Districts: Townhouse residences may be permitted as a conditional use in the R-6 zoning districts.

2. Dimensional Requirements: Townhouse residential development as a conditional use shall comply with dimensional requirements as specified in Section XIV.14 of this Ordinance.

3. Location within Zoning Districts:

a. It is the intent of this conditional use to provide a buffer between intense land uses and low density single family residences. To that extent the Board of Zoning Adjustment may permit conditionally townhouses at the fringe of a low density residential zone where it abuts more intense and/or incompatible land use. The Board may further permit such density housing near the intersection of two major streets where highway traffic may not be conducive to single family residential development. It is the intent of this conditional use to give the residents in such neighborhoods an opportunity to make comments that they may have on such developments.

b. This conditional use is not intended to change the character of the R-6, zoning district to one of the higher density development. Therefore, such conditional use shall be allowed only for the single zoning lot or development, which abuts a land use incompatible with R-6, type development. Thereafter, the permitted conditional use will be considered a compatible land use within the R-6 district.

4. Parking and Loading: Off-street parking and loading requirements shall be in compliance with Articles V and VI, respectively.

5. Landscaping and Buffers: Townhouse development as a conditional use shall comply with the landscaping and buffer requirements of Article IV. In addition, the Board of Zoning Adjustment may require a vegetative buffer strip or screen where this proposed development abuts low density existing or future housing.

6. Other Requirements: No more than four (4) townhouse units may be constructed under the provisions of this conditional use per zoning lot or development.

l. Emergency Services

1. Permitted Districts: Emergency services facilities may be permitted as a conditional use in all residential zoning districts.

2. Dimensional Requirements: Emergency service facilities shall comply with the yard, lot and height requirements of the district in which they are located.

3. Landscaping and Buffers: The Board of Zoning Adjustment may require a vegetative buffer and/or screen as it deems necessary to retain the character of the affected zoning district.

m. Flammable or Hazardous Chemicals: Bulk Storage Above Ground

1. Permitted Districts: Above ground bulk storage facilities for flammable and hazardous chemicals may be permitted as conditional uses in the B-2 General Business, and the I-1 and I-2 Industrial zoning districts.

2. Dimensional Requirements: The minimum lot area, width and setback requirements shall be the same as for the I-1 Light Industrial district, unless provided otherwise herein. No tank constructed above ground, nor basin or dyke, not truck loading dock shall not be located closer than twenty (20) feet to a property or street right-of-way line.

3. Parking and Loading: Off-street parking and loading areas shall be provided as required by Article V and VI, respectively. Vehicular access to the facility shall be provided in such a manner so as not to require the use of residential streets.

4. Landscaping and Buffers: Landscaping and buffers shall be provided as required by Article IV. In all instances, a chain link fence shall be provided to completely enclose and secure the loading and storage facilities.

5. Other Requirements:

   a. The proposed storage and loading facilities as well as any warehousing structures shall conform to the requirements of applicable federal, state, and local laws.

   b. The applicant shall provide with the site development plan: The layout of the entire project including the location of buildings, storage tanks, loading facilities, pumps and other apparatus. The plan shall show the storage tank location, design, diameter, height and storage capacity as well as the location, height, storage capacity and method of construction of dyke systems. A statement of the fuels to be stored in each tank shall be included on the plan.

n. Flammable or Hazardous Chemicals: Bulk Storage Below Ground

1. Permitted Districts: Underground bulk storage facilities for hazardous and flammable chemicals may be permitted as conditional uses in the B-2 General Business, and the I-1 and I-2 Industrial zoning districts.

2. Dimensional Requirements: The minimum lot area, width, and setback requirements shall be the same as for the zoning district in which the facility is located, unless provided otherwise herein. All storage tanks, loading facilities, pumps, and other appurtenances shall be located at least twenty (20) feet from any property or street right-of-way line.

3. Parking and Loading: Off-street parking and loading areas shall be provided as required by Articles V and VI, respectively

4. Other Requirements:

a. The proposed storage and loading facilities as well as any warehousing structures shall conform to the requirements of applicable federal, state, and local laws.

c. The applicant shall provide a report, completely describing the types of materials stored.

o. Fortunetelling

1. Permitted Districts: Fortunetelling services may be permitted as a conditional use in the B-2 zoning district and as a permitted use in the B-3 zoning district subject to these same standards.

2. Dimensional Requirements: Fortunetelling services shall comply with dimensional requirements of the district in which the use is located.

3. Parking and Loading: Off-street parking and loading requirements shall comply with Articles V and VI, respectively.

4. Landscaping and Buffers: Landscaping and buffers shall be provided as required in Article IV.

5. Other Standards:

a. No fortunetelling service may operate within three hundred (300) feet of any residential zone.

b. No fortunetelling service may operate within three hundred (300) feet of any public, private, or parochial school, library, park, playground, church, or other places where minors tend to congregate.

c. No fortunetelling service may operate within a three hundred (300) foot radius of two (2) other such uses.

d. Advertisements, displays, or other promotional materials shall not be shown or exhibited so as to be visible to the public from public right-of-ways or from public/semi-public pedestrian walkways. Such displays shall be considered as signs. Permitted signs shall be limited to those whose copy includes only the name of the business, place, organization, building, or person it identifies; and the size and location of such signs are controlled by Ordinance 21, 2012.

p. Group Care Home

1. Permitted Districts: Group homes with more than four (4) residents may be permitted as a conditional use in all residential zoning districts, the B-3 Downtown/Business, and the P-H Public Hospital zoning districts.

2. Dimensional Requirements: A group home shall comply with the lot, yard, and height requirements of the district in which such facility is located. Additional yard requirements may be set by the Board to protect the group home residents and to preserve the neighborhood character of the surrounding area.

3. Parking and Loading: Off-street parking and loading requirements shall comply with Articles V and VI, respectively.

4. Landscaping and Buffers: The Board of Zoning Adjustment may require a vegetative buffer and/or screen as it deems necessary to retain the neighborhood character of the surrounding area and to protect the group home residents.

5. Other Requirements:

   a. Group care facilities shall be allowed only when licensed by an appropriate State or local agency. If such licensing is contingent upon the approval of the City of Ashland, the issuance of a Conditional Use Permit shall be conditioned upon obtaining the required license within ninety (90) days after approval of the permit.

   b. In order to prevent concentration of group care facilities to the detriment of the group home residents and the impaction of a residential block or neighborhood, the Board shall exercise carte in considering a request to establish a group care facility. In no instance shall the Board approve a proposed group care facility which would be located within fifteen hundred (1,500) feet of another facility or similar institution.

   c. The applicant shall provide a written statement addressing each of the following items:

      1. The number of staff personnel to reside and/or work in the facility, with their backgrounds and qualifications.

      2. The number of individuals to be housed in the facility (not counting the staff personnel) and their backgrounds, ages, sex, etc. If this information is not known, the applicant shall explain the purpose of the facility and the purpose of group home residency.

      3. The estimated length of stay for individuals in the facility.

      4. The intake criteria which have been or will be used in screening the persons who will live in and benefit from the facility.

      5. The applicant shall provide a floor plan of the group care facility, drawn to scale, and showing the use and dimensions of each room and the location of entrances and exits.

q. Indoor Gun Range

1. Permitted districts: An indoor gun range may be permitted as a conditional use in the I-1, I-2 and B-2 zoning districts.

2. Dimensional requirements: the dimensional requirements for this use shall be the same as for the zoning district in which the property is located, unless provided otherwise herein.

3. Parking and Loading: Off -street parking and loading requirements shall be in compliance with Articles V and VI respectively.

4. Landscaping and Buffers: Landscaping and buffers shall be provided as required by Article IV.

5. Noise emerging from the use shall be governed by:

   A. Every use and activity shall be operated so that regular recurring noises are not disturbing or unreasonably loud, and do not cause injury or detriment to surrounding properties.

   B. The use must comply with all provisions of the City of Ashland noise ordinance Ord. 108, 2008

6. Lighting, if provided, shall be so designed and located as to be directed away from residential areas or shielded to protect them.

7. Vehicular access to the site shall be provide from major streets and not residential local streets.

8. The applicant shall provide a statement detailing the proposed activities and uses of the grounds and facilities as well as all safety and security measures as well as the disposal of waste.

9. Building shall be constructed in such a fashion as to prohibit any projectile from exiting the building.

10. Facility shall make use of all safety required under state and federal statutes and regulations and comply with NRA recommended codes for sight and hearing protection.

r. Industrial Operations (Not Specifically Listed in the Table of Permitted Uses)

1. Permitted Districts: Industrial operations may be permitted on a conditional basis in the I-1 Light Industrial and the I-2 Heavy Industrial zoning districts. The potential for community nuisances created by such operations will allow the Board of Adjustment to determine whether such operations are “light” or “heavy” industrial, in light of the purpose statements for each district (Section I.6).

2. Dimensional Requirements: The dimensional requirements for industrial operations as conditional uses shall be the same as the I-1 or I-2 districts (Section XIV.13). The Board of Zoning Adjustment may, however, require additional yard requirements for the protection of the public health, safety, and welfare. Such greater yard requirements shall be based upon the nature of the industrial operation and the proximity of the facility to surrounding structures and land uses (existing or future).

4. Parking and Loading: Off-street parking and loading areas shall be provided as required by Articles V and VI, respectively.

5. Landscaping and Buffers: Landscaping and buffers shall be provided as require by Article IV.

6. Other Requirements:

   a. No industrial operation shall be permitted which may become an annoyance or nuisance by reason of unsightliness or the excessive emission of noise, dust, odor, fumes, or particulates. Determination of whether a proposed establishment may be objectionable shall be the judgment of the Board of Zoning Adjustment.

   b. Industrial operations which contain, utilize, or manufacture products or materials considered hazardous to life and property from fire or explosion shall conform to national, state, and local fire codes. Where such codes conflict with this Ordinance or each other, the more restrictive shall apply.

   c. The applicant shall provide a report, in writing, completely describing the proposed operation, including the types of products and materials used in the manufacturing process, and finished products and materials.

s. Keeping of Animals, Non-Household

1. Permitted Districts: Keeping of animals, non-household may be permitted as a conditional use by educational institutions located in the R-6 and R-5 zoning districts.

2. Dimensional Requirements: The keeping of animals, non-household shall comply with the dimensional requirements of the district in which the use is located; provided, however, that the lot must have at least five (5) contiguous acres, and that no coop or other enclosure for the animals be closer than two hundred (200) feet from any property line.

3. Other Requirements:

   a. A Conditional Use Permit may be issued to an educational institution seeking to keep domesticated hens on school grounds for educational

purposes. A domesticated hen shall mean a female chicken and does not include any other type of fowl or a male chicken.

b. An educational institution may keep no more than twelve (12) domesticated hens.

c. All domesticated hens maintained for educational purposes shall be maintained in sanitary conditions that prevent excessive offensive odors from becoming a source of discomfort to persons living in the vicinity, and that prevent an inordinate amount of flies from existing and breeding.

d. Ground feeding shall be prohibited. A feeding container shall be used for feeding and all unused or unconsumed food shall be adequately secured and stored after every feeding as to prevent access by other animals or rodents. All feeding shall be conducted in a manner as to prevent unconsumed food to be left open or accessible by other animals or rodents.

t. Mobile Home Parks

1. Permitted Districts: Mobile home parks are permitted as conditional uses in all residential zoning districts.

2. Dimensional Requirements:

a. Minimum tract size shall be three (3) acres.

b. Minimum tract frontage shall be one hundred (100) feet along a public road.

c. Mobile home sites and park structures shall be set back at least fifty (50) feet from any abutting public street right-of-way line; and at least thirty (30) feet from any other abutting property line.

d. Each mobile home space shall have an area of at least 4,000 square feet.

3. Roads:

Private, hard surface roads are required within a mobile home park. Each mobile home space shall be directly accessible from an internal private road, with no direct access to public streets. Layout and construction of the private roads shall be approved by the Director of Public Works and City Engineer.

4. Utilities:

Each mobile home park created under this conditional use shall be provided with an approved public water supply and sewage disposal system, and shall be approved by the City Engineer.

5. Parking:

Each mobile home space shall be provided with one off-street parking space, located conveniently to the mobile home space.

6. Recreation:

Not less than ten percent (10%) of the area of each mobile home park shall be developed for active and passive recreation, including children's equipment and a fenced tot lot. Required setbacks and laundry drying yards shall not be considered recreation areas.

7. Pedestrian Access:

Walkways, two (2) feet wide for individual mobile home space and three (3) feet wide for common areas shall be provided. They shall be smooth surfaced with asphalt, concrete, or gravel; and shall be free from mud, dust, a standing water at all times. All roads serving more than fifteen (15) mobile homes spaces shall have a three (3) foot wide sidewalk along one (1) side of the road.

8. Individual Mobile Home Spaces:

   a. Mobile homes shall be separated from each other by not less than thirty (30) feet in all directions, and forty (40) feet when located on opposite sides of an internal road. Expandable rooms, double-wides, and additions to mobile homes shall be considered integral parts of the structure for these spacing requirements.

   b. Mobile home stands shall be provided with anchorage and each mobile home shall be anchored.

   c. Each mobile home shall be curtained around its base. Such curtain shall be completely enclosed to control rodent harborage.

   d. No storage shall be allowed on or around a mobile home space other than in completely enclosed storage facilities.

9. Refuse and Debris:

   a. All refuse shall be stored in water tight, rodent-proof containers; which shall be located within one hundred (100) feet of each mobile home space and common structures.

   b. Mobile home parks shall be maintained free of debris and undergrowth.

   c. Refuse shall be collected on a regular basis to assure a healthy and safe residential environment.

10. Accessory Uses: Self-service laundries and community centers may be included in a mobile home park; provided they are operated for the convenience of the park's residents, and that no sign regarding such accessory uses shall be visible from outside the park's borders.

11. Recreational Vehicles are permitted in Mobile Home Parks and shall be established and maintained in accordance with KRS 219.310 through 219.410 and 902 KAR 15:020.

    a. A Recreational Vehicle Occupancy Permit shall be obtained from the Building Inspector.

    b. Length of stay in a Recreational Vehicle shall be no more than six (6) consecutive months, although a one-time extension may be granted for an additional six (6) months. A Recreational Vehicle shall not be permitted to remain in the same Park for greater than twelve (12) months.

u. Natural Resources Extraction

1. Permitted Districts: Natural resources extraction may be permitted as a conditional use in all zoning districts.

2. Dimensional Requirements: No excavation shall take place closer than fifty (50) feet to any property line, street right-of-way line, or shore line of any water course, and no drilling shall take place within fifteen (15) feet of such lines.

3. Other Requirements:

    a. Access to and from the site shall be provided so as to assure that the traffic flow on any adjacent street or highway will not be impeded.

    b. Any temporary or permanent building used in connection with this operation shall meet the setback requirements of the zoning district in which the property is located. No such building shall be occupied for residential purposes.

    c. The loading of trucks shall be accomplished in such a way to prevent spillage on any street or roads.

    d. Upon termination of the operation, all buildings and equipment shall be removed, all excavation areas shall be graded so as to provide for natural drainage, and vegetation shall be planted to prevent erosion.

    e. Any blasting operations in connection with the use shall be conducted between 8:00 a.m. and 5:00 p.m. Blasting shall be performed in such a manner as to protect neighboring properties from flying debris.

f. No extractive operations shall interfere with the natural drainage flow of the area, endanger any surrounding property, or cause undue vibration, noise or wind-blown dust or sand.

g. The entire area of operation shall be enclosed by a six (6) foot fence to make the area inaccessible to the general public.

4. Plan Requirements: The applicant shall provide a site plan drawn to scale, showing the following:

a. The dimensions and acreage of the site and its relation to surrounding properties and streets.

b. The topography of the site at contour intervals of two (2) feet indicating existing contours as well as proposed contours after the excavation has occurred.

c. The plan for rehabilitation of the site after the excavation, describing the areas to be refilled, topsoiled, and seeded.

d. An estimate of the total volume of soil and other materials to be removed from the site and the length of time requested to conduct the operation.

e. All existing utility lines, water courses, and drainage easements.

f. Title, north arrow, scale, name of owner, surveyor, and the date of plan preparation.

v. Nursing Homes

1. Permitted Districts: Nursing homes may be permitted as conditional uses in the R-5, R-4, B-1 and B-3 zoning districts.

2. Dimensional Requirements: Nursing homes, shall comply with the dimensional requirements of the district in which the facility is located. Additional yard requirements may be set by the Board to preserve the neighborhood character of the area, and to protect the home residents.

3. Parking and Loading: Off-street parking and loading requirements shall comply with Articles V and VI, respectively.

4. Landscaping and Buffers: Landscaping and buffers shall be provided as required in Article IV. The Board may require additional landscaping/buffers in order to protect home residents and the surrounding neighborhood character.

w. Public Utility Substation/Stations

1. Permitted Districts: Public utility substations/stations may be permitted as conditional uses in the R-12, R-6, R-5, R-4, B-1, B-3, and P-H districts.

2. Dimensional Requirements: The setback of any building or structure, or any use instituted, shall be a minimum of twenty-five (25) feet, or the required setbacks of the district, whichever is greater.

3. Parking and Loading: Off-street parking and loading requirements shall comply with Articles V and VI, respectively.

4. Landscaping and Buffers:

   a. Portions of properties not used for facilities, parking or related services shall be maintained with grass or other suitable ground cover.

   b. A durable wall, fence or hedge or other natural planting shall be provided along the exterior property lines of any lot within residential districts, and along any exterior property line that adjoins any lot in residential districts. Such wall, fence or hedge shall be at least six (6) feet in height, measured from the ground along the lot lines of adjoining properties. Hedges or comparable natural planting shall be planted at an initial height of at least three (3) feet and shall be of such variety that an average height of six (6) feet could be expected by normal growth within two (2) years from the time of planting.

   c. Where hedges or other natural landscape materials are used, a six (6) foot high chain fence shall be erected inside the hedge to make the facility inaccessible to the general public.

5. Other Requirements:

   a. Whenever possible, facilities should be located on interior properties rather than on properties aligned with other lots of continuous street frontage.

   b. The design of buildings, structures and facilities on the site shall conform as closely as possible to the character of the area or neighborhood, so that facilities or structures will not adversely affect the safe and comfortable enjoyment of nearby properties.

   c. Outdoor storage shall be completely screened from view of adjoining properties and streets.

x. Recreation Facilities: Public and Non-Profit

1. Permitted Districts: Public and non-profit recreation facilities may be permitted as conditional uses in all residential and the B-1 zoning districts.

2. Dimensional Requirements: The dimensional requirements for public and non-profit recreational facilities as conditional uses shall be the same as for zoning district in which the property is located unless provided otherwise herein.

3. Parking and Loading: Off-street parking and loading requirements shall be in compliance with Articles V and VI, respectively.

4. Landscaping Buffers: Public and non-profit recreation facilities as conditional uses shall comply with the landscaping and buffer requirements of Article IV. The Board of Zoning Adjustment may, in addition, require further landscaping in order to protect the residential character of surrounding properties.

5. Other Requirements:

   a. Noise emanating from the amusement shall be governed by the following provisions:

      1. Every use and activity shall be operated so that regularly recurring noises are not disturbing or unreasonably loud, and do not cause injury or detriment to surrounding properties.

      2. Every use and activity shall be so operated that regularly recurring noises, as detected by the human sense of hearing, without instrument, at adjoining residential property lines, shall not exceed the normal noise level generated by uses permitted in residential districts.

   b. Lighting, if provided, shall be so designed and located to be directed away from residential areas or shielded to protect them.

   c. The vehicular traffic generated by such a facility shall be of a volume which will not create any safety hazards, or disrupt the residential character of the neighborhood.

   d. The applicant shall provide a statement detailing the proposed activities and uses of the grounds and facilities.

y. Recreational Facilities: For Profit

1. Permitted Districts: Recreation facilities operated for profit may be permitted as a conditional use in the B-1 and B-2 zoning districts.

2. Dimensional Requirements: The dimensional requirements for this conditional use shall be the same as for the zoning district in which the property is located, unless provided otherwise herein.

3. Parking and Loading: Off-street parking and loading requirements shall be in compliance with Articles V and VI, respectively.

4. Landscaping and Buffers: Landscaping and buffers shall be provided as required by Article IV. The Board of Zoning Adjustment may require additional landscaping in order to protect the neighborhood character.

5. Other Requirements:

   a. Noise emanating from the amusement shall be governed by the following provisions:

      1. Every use and activity shall be operated so that regularly recurring noises are not disturbing or unreasonably loud, and do not cause injury or detriment to surrounding properties.

      2. Every use and activity shall be so operated that regularly recurring noises, as detected by the human sense of hearing, without instrument, at adjoining residential property lines, shall not exceed the normal noise level generated by uses permitted in the zoning district.

   b. Lighting, if provided, shall be so designed and located to be directed away from residential areas or shielded to protect them.

   c. Vehicular access to the site shall be provided from major streets and not residential local streets.

   d. The applicant shall provide a statement detailing the proposed activities and uses of the grounds and facilities.

z. Temporary Uses (Not Otherwise Addressed by Other Provisions)

1. Permitted Districts: Temporary uses may be permitted as conditional uses in all zoning districts.

2. Dimensional Requirements: The dimensional requirements shall be the same as for the zoning district in which the temporary use is to be located.

3. Parking and Loading: Off-street parking and loading shall be provided as required by Articles V and VI, respectively.

4. Landscaping and Buffers: Temporary uses are exempt from the landscaping and buffer requirements of Article IV of this Ordinance; provided, however, that the

Board of Zoning Adjustment may require appropriate screening when necessary to protect surrounding or adjacent residential uses.

5. Other Requirements:

a. Temporary uses, as conditional uses, shall include, but not be limited to, the following:

1. The uses of open land for revivals, circuses and carnivals; or the sale of Christmas trees, baked goods, or collected clothing, produce, and the like, if no structure is erected other than tents or booths.

2. The use of a building and surrounding land by any non-profit, charitable, religious, or educational organization for the purpose of exhibiting and purveying, indoor or out-of-door, arts, and crafts, products, jewelry, clothing, foods, beverages, horticultural specimens, home furnishings and decorations and similar or related items; and for presenting musical or theatrical programs.

b. The Board of Zoning Adjustment shall take into account the adverse effect, if any, of the temporary use on its neighbors and the public; the temporary nature of the use; the necessity of the use; the hardship of the owner; the zoning of the property and the surrounding area; and any other relevant factors in the particular circumstances.

c. The temporary use permitted under this Sub-section shall be limited to the uses as specified by the Board of Zoning Adjustment.

d. Each applicant shall furnish assurances that at the termination of the temporary use permit, all properties of every nature moved onto the site under the permit shall be removed, and that no unsightly residue of property or land displacements shall be allowed to remain on the site.

e. The temporary use shall not involve the use of advertising signs on any site located in a residential zoning district, other than one small (ten square feet) announcement sign, un-illuminated. In all other zoning districts, signs shall conform to the requirements of Ordinance 21, 2012 for the district in which the use is to be located.

f. The duration of the temporary use shall be specified on the permit issued by the Board of Zoning Adjustment. A conditional use permit, granted for a temporary use, is not intended as a means to circumvent the use restrictions of individual zoning districts. Therefore, a temporary use permit issued under these provisions shall not be valid for more than six (6) consecutive weeks, nor twelve (12) non-consecutive weeks within any twelve month period.

6. A conditional use permit is not required for a temporary use which meets all three of the following circumstances: 1) the use is permitted as-of-right or under a valid conditional use permit; 2) it is housed in a permanent structure designed for such a use; and 3) adequate off-street parking is available. Further, a conditional use permit is not required for: residential yard sales as defined by the City Commission; door-to-door solicitations; and public activities approved by the City Commission on public lands.

7. Non-profit organizations are exempt from the conditional use permit applications fee of $100 (Ord 144, 1999).

aa. Professional Services Use of Historic Structures

1. Permitted Districts: Professional services uses may be permitted as conditional uses in historic structures in the R-4, R-5, and R-6 zoning districts.

2. Permitted Properties: Utilization of this conditional use category is additionally limited to structures which are individually listed in the National Register of Historic Places; or designated as "Significant" structures within a National Register of Historic Places Historic District.

3. Dimensional Requirements: The dimensional requirements for professional services uses of historic structures as conditional uses shall be the same as for residential uses within the permitted district. However, the Board may impose additional or greater dimensional restrictions in order to maintain the historic setting of the subject property and surrounding area, and to maintain the primarily residential character of the neighborhood.

4. Parking and Loading: Stated parking and loading requirements will be waived for this conditional use category and replaced with the following. On a case by case basis, off-street parking must be provided based on the demand generated by the applicant. All needed parking shall be provided off the street. Parking may be provided off the subject property as per Section V.3 of this Zoning Ordinance. All aspects of provided parking shall be reviewed and approved by the Board with the objectives of maintaining the historic character of the subject property and surrounding area, and maintaining the primarily residential character of the neighborhood. Loading berths will not be required; the non-residential use proposed shall not be at such a scale to need large scale deliveries.

5. Landscaping and Buffers: Landscaping and buffering shall be provided as determined necessary to visually screen property features which are not in keeping with the historic and/or residential character of the property and surrounding neighborhood.

6. Other Standards:

a. The purpose of this conditional use category is to preserve our historic and architectural heritage, while retaining historic residential neighborhood character. Historic homes may be used for non-residential purposes; however, limitations are placed on such uses as well as physical changes to the property.

b. The non-residential use of property within this conditional use category is limited to professional services. The definitions of this Zoning Ordinance distinguish among professional, personal, and retail services.

c. The scope of non-residential use under this category shall not be so great as to attract traffic not anticipated within the surrounding residential neighborhood. Deliveries by large trucks is prohibited.

d. Physical changes to the property shall be minimal. The principal structure shall be restored as much as possible. Additions and alterations shall be compatible with the historic architectural integrity of the principal structure; and the historic residential character of the neighborhood. This includes parking, landscaping, lighting, signage, as well as structural changes.

e. "The Secretary of the Interior's Standards for Historic Preservation" shall be the guide for all proposals to physically change in historic property. A review by the Kentucky State Historic Preservation Officer may be required. If a local historic district and/or properties agency exists, a design review by such group will be required prior to issuance of a conditional use permit under this category (Ord 6, 1995).

bb. Warehousing, Mini-Storage

1. Permitted Districts: Mini-storage warehouses are permitted as a conditional use in the B-1 zoning district.

2. Dimensional Requirements: Mini-storage warehouses shall comply with the dimensional requirements of the district in which the facility is located.

3. Parking and Loading: Off-street parking and loading requirements shall comply with Articles V and VI, respectively.

4. Landscaping and Buffers: Landscaping and buffer shall be as provided as required in Article VI.

5. Signs: Signs shall be in compliance with Ordinance 21, 2012.

6. Other requirements: No outdoor storage is allowed with this conditional use (Ord 128, 1999).

ARTICLE XIV
DISTRICT REGULATIONS

XIV.1 R-12 Residential/Low Density

Within the R-12 Residential zoning district as shown on the official Zoning Map, all development and land uses shall comply with the following minimum requirements, and with the district intent statement (Section I.6.a).

a. Permitted and Conditional Uses:

Land in R-12 zoning districts shall be used and buildings shall be erected, altered, enlarged, or used only for the permitted or conditional uses indicated in the R-12 column of the table of permitted and conditional uses section XIV.13 of this Ordinance.

b. Dimensional Requirements:

Land in a R-12 zoning district shall be developed and used only in compliance with lot area, lot width, front yard, side yard, rear yard, and lot coverage standards indicated in the R-12 section of the Table of Dimensional Requirements Section XIV.14 or as otherwise provided by other provisions of this Ordinance.

c. Parking and Loading Requirements:

Off-street parking and loading areas shall be provided in accordance with Articles V and VI of this Ordinance, respectively.

d. Landscaping and Buffers shall be provided in accordance with Article IV of this Ordinance.

e. Sign Requirements:

Sign shall be permitted as regulated by Ordinance 21, 2012.

XIV.2 R-6 Residential/Medium Density

Within the R-6 Residential zoning district as show on the Official Zoning Map, all development and land uses shall comply with the following minimum requirements, and with the district intent statement (Section I.6.b).

a. Permitted and Conditional Uses:

Land in a R-6 zoning district shall be used, and buildings shall be erected, altered, enlarged, or used only for the permitted or conditional uses indicated in the R-6 column of the Table of Permitted and Conditional Uses-Section XIV.13 of this Ordinance.

b. Dimensional Requirements:

Land in a R-6 zoning district shall be developed and used only in compliance with the lot area, lot width, front yard, side yard, rear yard, and lot coverage standards indicated in the R-6 section of the Table of Dimensional Requirements Section XIV.14, or as otherwise provided by other provisions of this Ordinance.

c. Parking and Loading Requirements:

Off-street parking and loading areas shall be provided in accordance with Articles V and VI of this Ordinance, respectively.

d. Landscaping and Buffer Requirements:

Landscaping and Buffers shall be provided in accordance with Article IV of this Ordinance.

e. Sign Requirements: Signs shall be permitted as regulated by Ordinance 21, 2012.

XV.3 R-5 Residential/Medium Density

Within the R-5 Residential zoning district as shown on the Official Zoning Map, all development and land uses shall comply with the following minimum requirements, and with the district intent statement (Section I.6.c).

a. Permitted and Conditional Uses:

Land in a R-5 zoning district shall be used and buildings shall be erected, altered, enlarged, or used only for the permitted or conditional uses indicated in the R-5 column of the Table of Permitted and Conditional Uses Section XIV.13 of this Ordinance.

b. Dimensional Requirements:

Land in a R-5 zoning district shall be developed and used only in compliance with the area, lot width, front yard, side yard, rear yard, and lot coverage standards indicated in the R-5 section of the Table of Dimensional Requirements Section XIV.14, or as otherwise provided by other provisions of this Ordinance.

c. Parking and Loading Requirements:

Off-street parking and loading areas shall be provided in accordance with Articles V and VI of this Ordinance, respectively.

d. Landscaping and Buffer Requirements:

Landscaping and Buffers shall be provided in accordance with Article IV of this Ordinance.

e. Sign Requirements:

Signs shall be permitted as regulated by Ordinance 21, 2012.

XIV.4 R-4 Residential/High Density

Within the R-4 Residential zoning district as shown on the Official Zoning Map, all development and land uses shall comply with the following minimum requirements, and with the district intent statement (Section I.6.d).

a. Permitted and Conditional Uses:

Land in a R-4 zoning district shall be used and buildings shall be erected, altered, enlarged, or used only for the permitted or conditional uses indicated in the R-4 column of the Table of Permitted and Conditional Uses Section XIV.13 of this Ordinance.

b. Dimensional Requirements:

Land in a R-4 zoning district shall be developed and used only in compliance with the lot area, lot width, front yard, side yard, rear yard, and lot coverage standards indicated in the R-4 section of the Table of Dimensional Requirements Section XIV.14, or as otherwise provided by other provisions of this Ordinance.

c. Parking and Loading Requirements:

Off-street parking and loading areas shall be provided in accordance with Articles V and VI of this Ordinance, respectively.

d. Landscaping and Buffer Requirements:

Landscaping and Buffers shall be provided in accordance with Article IV of this Ordinance.

e. Sign Requirements:

Signs shall be permitted as regulated by Ordinance 21, 2012.

XIV.5 P-H Public/Hospital

Within the P-H Public Hospital zoning district as shown on the Official Zoning Map, all development and land uses shall comply with the following minimum requirements, and with the district intent statement (Section I.6.j).

a. Permitted and Conditional Uses:

Land in a P-H zoning district shall be used and buildings shall be erected, altered, enlarged, or used only for the permitted or conditional uses indicated in the P-H column of the Table Permitted and Conditional Uses Section XIV.13 of this Ordinance.

b. Dimensional Requirements:

Land in a P-H zoning district shall be developed and used only in compliance with the lot area, lot width, front yard, side yard, rear yard, and lot coverage standards indicated in the P-H section of the Table of Dimensional Requirements Section XIV.14 or as otherwise provided by other provisions of this Ordinance.

c. Parking and Loading Requirements:

Off-street parking and loading areas shall be provided in accordance with Articles V and VI of this Ordinance, respectively.

d. Landscaping and Buffer Requirements:

Landscaping and Buffers shall be provided in accordance with Article IV of this Ordinance.

e. Sign Requirements:

Signs shall be permitted as regulated by Ordinance 21, 2012.

XIV.6 B-1 Neighborhood Business

Within the B-1 Neighborhood Business zoning district as shown on the Official Zoning Map, all development and land uses shall comply with the following minimum requirements, and with the district intent statement (Section I.6.e).

a. Permitted and Conditional Uses:

Land in a B-1 zoning district shall be used, and buildings shall be erected, altered, enlarged, or used only for the permitted or conditional uses indicated in the B-1 column of the Table of Permitted and Conditional Uses-Section XIV.13 of this Ordinance.

b. Dimensional Requirements:

Land in a B-1 zoning district shall be developed and used only in compliance with the lot area, lot width, front yard, side yard, rear yard, and lot coverage standards indicated in the B-1 section of the Table of Dimensional Requirements-Section XIV.14, or as otherwise provided by other provisions of this Ordinance.

c. Parking and Loading Requirements:

Off-street parking and loading areas shall be provided in accordance with Articles V and VI of this Ordinance, respectively.

d. Landscaping and Buffer Requirements:

Landscaping and Buffers shall be provided in accordance with Article IV of this Ordinance.

e. Sign Requirements:

Signs shall be permitted as regulated by Ordinance 21, 2012.

XIV.7 B-2 General Business

Within the B-2 zoning district as shown on the Official Zoning Map, all development and land uses shall comply with the following minimum requirements, and with the district intent statement (Section I.6.f).

a. Permitted and Conditional Uses:

Land in a B-2 zoning district shall be used and buildings shall be erected, altered, enlarged, or used only for the permitted or conditional uses indicated in the B-2 column of the Table of Permitted and Conditional Uses-Section XIV.13 of this Ordinance.

b. Dimensional Requirements:

Land in a B-2 zoning district shall be developed and used only in compliance with the lot area, lot width, front yard, side yard, rear yard, and lot coverage standards indicated in the B-2 section of the Table of Dimensional Requirements-Section XIV.14, or otherwise provided by other provisions of this Ordinance.

c. Parking and Loading Requirements:

Off-street parking and loading areas shall be provided in accordance with Articles V and VI of this Ordinance, respectively.

d. Landscaping and Buffers shall be provided in accordance with Article IV of this Ordinance.

e. Sign Requirements:

Signs shall be permitted as regulated by Ordinance 21, 2012.

XIV.8 B-3 Downtown

Within the B-3 Downtown business zoning district as shown on the Official Zoning Map, all development and land uses shall comply with the following minimum requirements, and with the district intent statement (Section I.6.g).

a. Permitted and Conditional Uses:

Land in a B-3 zoning district shall be used, and buildings shall be erected, altered, enlarged, or used only for the permitted or conditional uses indicated in the B-3 column of the Table of Permitted and Conditional Uses-Section XIV.13 of this Ordinance.

b. Dimensional Requirements:

Land in a B-3 zoning district shall be developed and used only in compliance with the lot area, lot width, front yard, side yard, rear yard, and lot coverage standards indicated in the B-3 section of the Table of Dimensional Requirements-Section XIV.14, or as otherwise provided by other provisions of this Ordinance.

c. Parking and Loading Requirements:

Off-street parking and loading areas shall be provided in accordance with Articles V and VI of this Ordinance, respectively.

d. Landscaping and Buffer Requirements:

Landscaping and Buffers shall be provided in Accordance with Article IV of this Ordinance.

e. Sign Requirements:

Signs shall be permitted as regulated by Ordinance 21, 2012.

XIV.9 I-1 Light Industrial

Within the I-1 Light Industrial zoning district as shown on the Official Zoning Map, all development and land uses shall comply with the following minimum requirements, and with the district intent statement (Section I.6.h).

a. Permitted and Conditional Uses:

Land in an I-1 zoning district shall be used, and buildings shall be erected, altered, enlarged, or used only for the permitted or conditional uses indicated in the I-1 column of the Table of Permitted and Conditional Uses-Section XIV.13 of this Ordinance.

b. Dimensional Requirements:

Land in an I-1 zoning district shall be developed and used only in compliance with the lot area, lot width, front yard, side yard, rear yard, and lot coverage standards indicated in the I-1 section of the Table of Dimensional Requirements-Section XIV.14 or as otherwise provided by other provisions of this Ordinance.

c. Parking and Loading Requirements:

Off-street parking and loading areas shall be provided in accordance with Articles V and VI of this Ordinance, respectively.

d. Landscaping and Buffer Requirements:

Landscaping and Buffers shall be provided in accordance with Article IV of this Ordinance.

e. Sign Requirements:

Signs shall be permitted as regulated by Ordinance 21, 2012.

f. Other Requirements:

No discernable glare, noise, dust, fumes or odors (in excess of that likely to occur in the other zoning districts) shall be discernable from adjacent non-industrial districts.

XIV.10 I-2 Heavy Industrial

Within the I-2 Heavy Industrial zoning district as shown on the Official Zoning Map, all development and land uses shall comply with the following minimum requirements, and with the district intent statement (Section I.6.1).

a. Permitted and Conditional Uses:

Land in an I-2 zoning district shall be used, and buildings shall be erected, altered, enlarged, or used only for the permitted or conditional uses indicated in the I-2 column of the Table of Permitted and Conditional Uses-Section XIV.13 of this Ordinance.

b. Dimensional Requirements:

Land in an I-2 zoning district shall be developed and used only in compliance with the lot area, lot width, front yard, side yard, rear yard, and lot coverage standards indicated in the I-2 section of the Table of Dimensional Requirements-Section XIV.14, or as otherwise provided by other provisions of this Ordinance.

c. Parking and Loading Requirements:

Off-street parking and loading areas shall be provided in accordance with Articles V and VI of this Ordinance, respectively.

d. Landscaping and Buffer Requirements:

Landscaping and Buffers shall be provided in accordance with Article IV of this Ordinance.

e. Sign Requirements:

Signs shall be permitted as regulated by Ordinance 21, 2012.

XIV.11 Planned Unit Development District (PUD)

(1) Purpose: The purpose of the Planned Unit Development District is to encourage flexibility in the development of land in order to promote its most appropriate use: to improve the design, character and quality of new development; to facilitate the provisions of streets and utilities; and to preserve the natural and scenic features of open space.

This district is best suited to undeveloped areas, where "planned unit development" is a superior response to less coordinated development, as permitted elsewhere in this ordinance. It is also an appropriate response in relatively large areas undergoing redevelopment.

(2) District Requirements: In order to qualify as a Planned Unit Development District, a project request must meet the following minimum requirements:

a. The site must contain not less than one-half (1/2) acre and have a minimum width between any two (2) opposite boundary lines of one hundred twenty-five (125) feet, and must adjoin or have direct access to at least one public street. However, the Planning Commission and City Commission may reduce the requirements of twenty- five (25%) percent to encourage better design and site application of PUD Districts.

b. The site shall be in one ownership, or if in several ownership's, the application for amendment to the zoning ordinance shall be filed jointly by all of the owners.

c. At the time of application for rezoning the site shall not be divided by any public right-of-way, unless all tracts so divided contain the minimum site size for a PUD; off-site parking shall not be used in the calculation of the minimum site size and is therefore, excluded from this requirement.

d. A site plan shall be submitted with the request for change and shall contain the following information:

1. The proposed title of the project and the name of the engineer, architects, designer, or landscape architect, and the developer.

2. The northpoint, scale and date. The scale of the site plan shall not be more than fifty (50') feet to one (1") inch.

3. Existing zoning and zoning district boundaries and proposed changes.

4. The boundaries of the property involved, the general location of all existing easements, property lines, existing streets, buildings and other existing physical features on or adjoining the project.

5. The approximate location and sizes of existing and proposed sanitary and storm sewers, water mains, culverts, and other underground facilities in or near the project on a topographic map using contour lines at appropriate intervals.

6. The general location and dimensions of construction of proposed streets, alleys, driveways, curb cuts, entrances and exits, parking and loading areas (including number of parking and loading spaces).

7. The general location of proposed lots, setback lines, easements, and generalized land use plan.

8. The location and approximate heights of all proposed main and accessory buildings and dimension of structures drawn to scale.

9. Identification of all lands in private or common ownership.

10. General location, height, width and material of all fences, walls, screens, plantings and landscaping.

11. Proposed location and number of dwelling units (by bedroom type) for each structure.

12. General location, character, size and height or orientation of proposed signs.

13. The Planning Commission and City Commission may establish additional requirements for site plan approval, and in specific cases, may waive a particular requirement, if, in their opinion, the inclusion of that requirement is not essential to a proper assessment of the project.

e. In addition to the above, an application for a PUD district shall be accompanied by:

1. Proposed standards for the development of the project, including restrictions on the use of property, density standards, yard requirements and restrictive covenants, if any;

2. A statement defining the manner in which the City is to be assured that all improvements and protective devices are to be installed and maintained; and,

3. A construction schedule.

In any case where a planned unit development which has been denied wholly or in part by the City Commission shall be resubmitted for a period of one year from the date of said order of denial expect on the grounds of new evidence or proof of change of conditions.

(3) Permitted Uses: Any use proposed by the developer and considered by the Planning Commission and City Commission as being compatible to other nearby uses within and beyond the district may be permitted in such district, upon the approval by the planning commission and City Commission. A listing of permitted uses within a particular PUD district shall be adopted as part of the regulations applying to that district. After approval by the Planning Commission and City Commission, the list of portion thereof shall be adopted as part of the regulations applying to that particular PUD district.

Thereafter, the uses permitted in the district shall be restricted to those listed, approved and adopted.

(4). General design criteria and development standards:

a. Overall site design shall be harmonious in terms of landscaping, enclosure of principal and accessory uses, sizes of structures, street patterns, and use relationships. Variety in building types, setbacks and size of open spaces shall be encouraged.

b. Parking requirements for each PUD district shall be assessed based upon Common parking standards contained in this ordinance. Areas designated for parking and loading or for trafficways shall be physically separated from streets by suitable barriers against unchanneled motor vehicle ingress and egress.

c. Fifteen percent (15%) of each project shall be developed into common open space and no more that seventy-five percent (75%) of any lot or parcel shall have an impervious surface. Regulation golf courses shall be excluded from the total acreage in determining that fifteen percent (15%).

d. Signage within PUD districts will be harmonious with the proposed uses and will be architecturally integrated with the overall project design. Actual allowable signage within a PUD district will be determined at the times a particular PUD district is established or amended. Moreover, it is generally not the intent to allow signage of greater intensity than would be allowed similar uses within other zoning districts.

(5). Administrative Procedures: Requests for a PUD zoning shall be as provided for amendments generally. Any request pertaining to the establishment of a PUD district shall be considered an amendment to the zoning ordinance, and shall be administered and processed in accordance with the regulations set forth in Article XII, entitled Amendment Procedures. The City Commission may approve the request in accordance with the site plan and other applicable regulations may make specific modifications to the plan or may deny the request. The final action shall occur

following a public hearing and recommendation which has been denied wholly or in part by the City Commission shall be resubmitted for a period of one year from the date of said order of denial except on the grounds of new evidence or proof of change of conditions.

Once a PUD district is established on the official zoning map, no building permit shall be issued therein unless approved plans and reports for the development as a whole or in stages or portions thereof are deemed satisfactory in relation to the total development. The form and content of such site plans and reports shall be as prescribed in the zoning, subdivision regulations and other regulations involved generally, and in rules of other affected agencies.

Upon approval by the City Commission, one copy of the site plan and the PUD Agreement shall be recorded in the office of the Boyd county Clerk of Court.

Building permits shall then be issued in the same manner as for building permits generally . Except as provided below, the plans and reports approved shall be binding on the applicant and any successors in title so long as the PUD zoning is applicable.

(6). Changes and modifications: Minor changes in the Planned Unit Development may be approved by the Planning Commission or its designated agent provided that such changes:

a. Do not increase the densities.

b. Do not change the outside exterior boundaries;

c. Do not change any use; however, a change from multi-family residential to single-family residential shall be considered a minor change provided densities are not increased;

d. Do not materially change the location or the amount of land devoted to specific land uses;

e. Do not significantly change the exterior appearance from those shown on any plans which may be submitted or presented by the developers;

f. Minor changes may include, but are not limited to: minor shifting of the location of buildings, proposed streets, public or private ways, utility easements, parks, or other open spaces, or other features of the plan.

Major changes in the Planned Unit Development shall be treated as amendments to the ordinance and shall only be approved subject to rezoning requirements. Major changes may include, but are not limited to the following:

1. Increases in density

2. Changes in boundary lines

3. Changes in land use

4. Changes in location or amount of land devoted to specific land uses; and;

5. Changes that significantly alter the appearance of structures.

(7). Public facilities, surety, cost, fees and charges: All public facilities and improvements made necessary as a result of the planned unit development shall be either constructed in advance of the approval of the final plat, or, at the discretion of the City Manager, escrow deposits, irrevocable letters of credit (in a form approved by the City Manager) or performance bonds shall be delivered to guarantee construction of the required improvements. Any such guarantee shall be 125 percent of the estimated installed cost.

(8). Maintenance: In the event that the organization established to own and maintain common open space, recreation areas and related facilities, or any successor organization, shall at any time after establishment of the planned unit development fail to maintain the common open space, recreation areas and related facilities in reasonable (as per the intent of the specific PUD district ordinance) order and condition, in accordance with the plan, the city may serve written notice upon such organization or upon the residents of the planned unit development setting forth the manner in which the organization has failed to maintain the space in the reasonable condition and said notice hall include the following:

a. A demand that such deficiencies of maintenance be rectified within thirty (30) days.

b. If such deficiencies are not rectified within a said thirty (30) days, the city shall serve notice of hearing. Said notice shall state the date and place of the hearing and shall be sent by registered mail not less than five (5) days or more than ten (10) days prior to the hearing date. At the hearing, if the City finds the deficiencies cannot be rectified by the responsible party, the city in order to preserve the taxable values of the properties within the planned unit development, ant to prevent the common open space from becoming a public nuisance, may enter upon said property and maintain the same for a period of one year. Said entry and maintenance shall not vest in the public any right to use the common open space or recreation areas when the same is voluntarily dedicated to the public by the owner. Before the expiration of said year, the city shall, upon its initiative or upon the request of the organization therefore responsible for the maintenance of the common open space, call a public hearing upon notice of such organization, or to the residence of the planned development to show cause when such maintenance by the city shall not at the election of the city continue for a succeeding year. If the City Commission determines that such organization is not ready and able to maintain said common space and recreation areas in a reasonable condition, the city may in its discretion continue to maintain such common open space during the next succeeding year and subject to a similar hearing and determination in each year thereafter. The decision of the City Commission in any case shall constitute a final administrative decision, subject to review in accordance with appropriate provisions of this ordinance. The cost of such maintenance by the city shall be assessed ratably against the properties within the planned unit development that have a right of enjoyment of the common open space and recreation space. The city may pursue each payment by appropriate legal action (Ord 6, 1999).

XIV.12 R-E Residential Estate

Within the R-E residential estate zoning district as shown in the Official Zoning Map, all development and land uses shall comply with the following minimum requirements, and with the district intent statement (Section I.6.k).

a. Permitted and Conditional Uses:

Land in the R-E zoning district shall be used and buildings shall be erected, altered, enlarged, or used only for the permitted or conditional uses indicated in the R-E column if the Table of Permitted and Conditional Uses- Section XIV.13 of this Ordinance.

b. Dimensional Requirements:

Land in an R-E zoning district shall be developed and used only in compliance with lot area, lot width, front yard, side yard, rear yard, and lot coverage standards indicated in the R-E section of the Table of Dimensional Requirements Section XIV.14 or as otherwise provided by other provisions of this Ordinance.

c. Parking and Loading Requirements:

Off-street parking and loading areas shall be provided in accordance with Articles V and VI of this Ordinance, respectively.

d. Landscaping and Buffer Requirements:

Landscaping and Buffers shall be provided in accordance with Article IV of this Ordinance (Ord 9, 1993)

XIV.13 Table of Permitted and Conditional Uses

a. Within the various districts as indicated on the Official Zoning Map of the City of Ashland, no land, building, or structure shall be used, and no building or structure shall be erected or altered, except in conformance with the provisions of this Section and this Ordinance. Any use not specifically permitted or prohibited is prohibited. Where more than one use occupies a building or premises, the zoning requirements for each use shall be adhered to as set forth in this Article.

b. Districts in which particular uses are permitted as a use-by-right are indicated by a "P" in this Table.

c. Districts in which particular uses are permitted as a conditional use, upon approval by the Board of Zoning Adjustment, are indicated by a "C", followed by a page number which directs the reader to the Article XIII standards for such a conditional use. Should any interpretation conflict arise between conditional uses allowed under this Table and Section XIII.3 (Regulations of Conditional Use Permits), this Table (XIV.13) shall be followed.

d. Districts in which particular uses are prohibited are indicated by a blank space in the following Table.

e. The zoning districts are as follows:

R-12	Residential / Low Density	R-6	Residential / Medium Density
R-5	Residential / Medium Density	R-4	Residential / High Density
B-1	Business / Neighborhood	B-2	Business / General
B-3	Business / Downtown	I-1	Industrial / Light
I-2	Industrial / Heavy	P-H	Public / Hospital

PERMITTED USES	ZONING DISTRICTS										
	R-E	R-12	R-6	R-5	R-4	B-1	B-2	B-3	I-1	I-2	P-H
Accessory structures & uses. See Article II	P	P	P	P	P	P	P	P	P	P	P
Adult Uses								C-71			
Alcoholic beverages, packaged retail sales							P	P			
Alcoholic beverages, wholesale distribution							P		P		
Animals, non-household, for personal use											
Animals, non-household, for personal use with a non-profit recreation use, not to be within 500 feet of another residential district	P										
Animals, non-household, for educational institutions			C-88	C-88							
Animal hospital, veterinary clinic (no outdoor animal storage)						P	P	P			
Animal / pet boarding, kennel							C-71		C-71		
Animal rendering operation										P	
Antique Shop						P	P	P			
Apparel & accessories, retail sales						P	P	P			
Apparel manufacture									P	P	
Armory							P		P		
Art gallery, museum				C-72	C-72	P	P	P			
Assembly hall, stadium							P	P			
Auction Sales							P	P	P		
Auto parking lots, with a permitted use	P	P	P	P	P	P	P	P	P	P	P
Auto parking lots, commercial							P	P	P		
Auto repair & body work, excluding outdoor storage of junk vehicles or parts							P	P	P		
Auto sales, new & used							P	P	P		
Auto service station						P	P	P	P	P	
Auto washing operation							P		P		
Baking, production and wholesale									P	P	
Baking, retail sales of on premises production						P	P	P	P		
Bank, financial institution						P	P	P			
Barber and beauty shop						P	P	P			P
Bed and breakfast facility				C-72							
Beekeeping Operations	C-73	C-73	C-73	C-73	C-73						

PERMITTED USES	ZONING DISTRICTS										
	R-E	R-12	R-6	R-5	R-4	B-1	B-2	B-3	I-1	I-2	P-H
Boarding House				P	P			P			P
Boats & accessories, retail sales & service							P	P	P		
Bottling operation									P	P	
Bowling alley							P	P			
Bus Terminal							P	P	P		
Building materials, sales & storage							P		P	P	
Building materials, manufacture									P	P	
Business machinery & equipment manufacture									P	P	
Cabinet making, wood working shop							P		P	P	
Candy & confectionary activity, production for on-premises retail sales						P	P	P	P		
Candy & confectionary products, manufacture & wholesale									P	P	
Canned & preserved food processing									P	P	
Cement, concrete & gypsum production, products manufacture										P	
Cemetery	C-74	C-74	C-74	C-74	C-74	C-74	C-74	C-74	C-74	C-74	C-74
Chemical products processing										P	
Church, place of worship, related activities	P	P	P	P	P	P	P	P			P
Clinic, Medical & dental						P	P	P			P
Clubs & fraternal organizations		C				C	P	P			
Coal sale & storage, unbagged										P	
Coke manufacturing										P	
Cold storage, freezer locker							P		P	P	
Communications equipment manufacture									P	P	
Contractors' office, with outdoor storage							P		P	P	
Contractors' office, excluding outdoor storage						P	P	P	P		
Craft Beverage/Distilled Spirit Production (large scale)									P	P	
Data Center										C-75	
Day care center, nursery	C-86	C-86	C-86	C-86	C-86	C-86	C-86	C-86	C-86	C-86	C-86
Delicatessen operation, including catering						P	P	P			

PERMITTED USES	ZONING DISTRICTS										
	R-E	R-12	R-6	R-5	R-4	B-1	B-2	B-3	I-1	I-2	P-H
Dental Office						P	P	P			P
Drug Store						P	P	P			P
Drugs, pharmaceuticals & cosmetics, manufacture									P	P	
Dry cleaning & laundry operations, self-service or retail						P	P	P			
Dry cleaning & laundry operation, industrial & wholesale							P		P	P	
Dwelling, single family, ~~excluding mobile home~~	P	P	P	P	P			P			
Dwelling, duplex			C-86	P	P			P			
Dwelling, small scale multi-family (one structure, no more than 4 units)			C-86	P	P			P			
Dwelling, mid-scale, multi-family (one or more structures, between 5 & 8 units)				P	P			P			
Dwelling, large scale multi-family (one or more structures and/or more than 8 units)				C-87	C-87			C-87			
Dwelling, Tiny Home				P	P						
Dwelling, townhouse			C-88	P	P			P			
Dwelling, zero lot line				P	P			P			
Eating/Drinking Establishment: Restaurant, no drive-through (with or without beer, wine or alcohol)						P	P	P			
Eating/Drinking Establishment: Restaurant, with drive-through							P				
Eating/Drinking Establishment: Restaurant, for large scale health institutions											P
Eating/Drinking Establishment: Tavern						P	P	P			
Eating/Drinking Establishment: Craft Beverage/Distilled Spirit Production (small scale)						P	P	P	P	P	
Electrical equipment, accessories & components, sales & service									P	P	
Electrical equipment, accessories & components, sales & service						P	P	P	P		
~~Electronic data processing~~						~~P~~	~~P~~	~~P~~	~~P~~	~~P~~	~~P~~
Emergency services	C-89	C-89	C-89	C-89	C-89	P	P	P	P	P	C-89
Exhibition building							P	P	P		
Extermination service							P	P	P	P	
Farm equipment, manufacture									P	P	
Farm equipment, sales & service							P	P	P		
Fertilizer, feed & farm supplies manufacture									P	P	
Fertilizer, feed & farm supplies, retail sales							P	P	P		

PERMITTED USES	ZONING DISTRICTS										
	R-E	R-12	R-6	R-5	R-4	B-1	B-2	B-3	I-1	I-2	P-H
Flammable or hazardous chemicals, bulk storage above ground							C-89		C-89	C-89	
Flammable or hazardous chemicals, bulk storage below ground							C-90		C-90	C-90	
Florist, including greenhouse						P	P	P	P		
Fortunetelling							C-91	P-91			
Freight terminal, rail or truck									P	P	
Funeral home, mortuary						P	P	P			P
Furniture & home furnishings manufacture & repair							P		P	P	
Furniture & home furnishings retail sales & repair						P	P	P			
Game room, amusement center						C	C	P			
Glassware, ceramics manufacture									P	P	
Golf course, regulations, par-three, miniature							P				
Group care home		C-91	C-91	C-91	C-91			C-91			C-91
Hardware & garden supplies manufacture									P	P	
Hardware & garden supplies, retail sales & service						P	P	P	P		
Health Clubs						P	P	P			
Home Occupation	P	P	P	P	P	P	P	P	P		P
Hospitality House											P
Hospital, sanatorium											P
Household appliances & furnishings manufacture									P	P	
Hotel, motel							P	P			P
Ice manufacturing plant							P		P	P	
Indoor Gun Range							C-93		C-93	C-93	
Industrial equipment, sales and service							P	P	P	P	
Industrial equipment, manufacture									P	P	
Industrial operation, not otherwise listed herein									C-93	C-93	
Janitorial services							P	P	P		
Laboratory, research & development, commercial & industrial									P	P	
Laboratory, medical & dental							P	P	P		P

PERMITTED USES	ZONING DISTRICTS										
	R-E	R-12	R-6	R-5	R-4	B-1	B-2	B-3	I-1	I-2	P-H
Landfill operation										P	
Leather products manufacture, tanning & finishing									*	P	
Locksmith, gunsmith						P	P	P			
Lounge, tavern						P	P	P			
Lumber yard									P	P	
Manufactured Home, Qualified	P	P	P	P	P						
Medical office						P	P	P			P
Medicinal cannabis cultivator									P	P	
Medicinal cannabis dispensary							P		P		
Medicinal cannabis processor									P	P	
Medicinal cannabis producer									P	P	
Medicinal cannabis safety compliance facility							P	P	P	P	P
Metal manufacture, steel										P	
Metal products manufacture									P	P	
Meat products processing										P	
Mobile home, for temporary non-residential use		P	P	P	P	P	P	P	P	P	P
Mobile home or Recreational Vehicle park, excluding sales		C-95	C-95	C-95	C-95						
Mobile home sales, excluding residential occupancy							P				
Modular home	P	P	P	P	P	P	P	P	P	P	P
Monument sales and works							P		P	P	
Motorcycle sales & service							P	P	P		
Musical instruments, toys and sports goods manufacturing									P	P	
Natural resources extraction	C-97	C-97	C-97	C-97	C-97	C-97	C-97	C-97	C-97	C-97	C-97
News stand sales						P	P	P	P	P	P
Nursing home				C-98	C-98	C-98		C-98			P
Office: business, professional, not otherwise listed						P	P	P			
Office equipment & supplies manufacture									P	P	
Optician service						P	P	P			P
Outdoor advertising structure							P		P	P	
Paint manufacture									*	P	
Pawn shop						P	P	P			
Personal Service operation not otherwise listed						P	P	P			
Pet sales & grooming, excluding outdoor storage						P	P	P			

PERMITTED USES	ZONING DISTRICTS										
	R-E	R-12	R-6	R-5	R-4	B-1	B-2	B-3	I-1	I-2	P-H
Photographic processing						P	P	P	P	P	
Planned unit development		P	P	P	P	P	P	P	P	P	P
Post office						P	P	P	P		
Printing, publishing & reproducing operation						P	P	P	P	P	
Professional service, not otherwise listed						P	P	P			
Public Utility service shop, storage yard							P		P	P	
Public utility station, substation, telephone exchange (excluding outdoor storage & maintenance)		C-99	C-99	C-99	C-99	C-99	P	C-99	P	P	C-99
Recreation facilities, non-profit, not otherwise listed		C-100	C-100	C-100	C-100	C-100	P	P			
Recreation facilities, for profit, not otherwise listed						C-100	C-100	P			
Rental of vehicles, machines & equipment							P	P	P		
Retail sales & service, not otherwise listed.						P	P	P	P		
Rooming house				P	P			P			P
Sawmill, planing operation									*	P	
School: business, commercial medical							P	P			P
School, college							P	P			
School, primary, secondary		P	P	P	P	P	P	P			P
School, trade & vocational							P	P	P	P	
Sewage treatment plant										P	
Sheet metal fabrication									P	P	
Shoe repair shop						P	P	P			
Shopping center, office center						P	P	P	P		
Sign manufacture, painting							P		P	P	
Soap & candle manufacture									*	P	
Storage, open, in connection with a permitted use (excluding junk, salvage, scrap, unbagged coal)							P		P	P	
Storage & processing of junk, salvage, scrap unbagged coal										P	
Studio for art, dance, music design, photography						P	P	P			
Tailor, dressmaking & millinery						P	P	P			
Taxicab & other transit operations							P	P	P		
Temporary construction building	P	P	P	P	P	P	P	P	P	P	P

PERMITTED USES	ZONING DISTRICTS										
	R-E	R-12	R-6	R-5	R-4	B-1	B-2	B-3	I-1	I-2	P-H
Temporary uses, not otherwise listed	C-101	C-101	C-101	C-101	C-101	C-101	C-101	C-101	C-101	C-101	C-101
Textiles processing, manufacture									P	P	
Theater, indoor						P	P	P			
Theater, outdoor							P				
Tire recapping operation									*	P	
Travel trailer, sales & service; no residential use							P	P	P		
Truck terminal							P		P		
Upholstery, furniture refinishing						P	P	P	P		
Warehousing, wholesale & distribution operation, not otherwise listed							P		P	P	
Warehousing, mini-storage						C-104	P		P	P	
Water treatment plant									P	P	

BLANK PAGE

XIV.14 TABLE OF DIMENSIONAL REQUIREMENTS

The following table indicates the minimum dimensional requirements for land use and development within the City zoning jurisdiction by each zoning district. The Board of Zoning Adjustment may impose other minimum standards for conditional use permits, as provided for under Article XIII of this Ordinance.

		Lot Area (A)	Lot Width	Front Yard	Side Yard	Rear Yard	Lot Coverage	Max. Height
R-E	All Uses	20,000 sf.	100’	30’	15’	25’	25%	45’
R-12	Single Family	12,000 sf.	70’	30’	10’	20’	30%	35’
	Other Uses	12,000 sf.	75’	30’	12’	20’	25%	35’
R-6	Single Family	6,000 sf.	50’	25’	6’	10’	35%	35’
	Duplex	3,000 (B)	50’	25’	6’	10’	35%	35’
	Multi-family	3,000 (B)	50’	25’	6’	10’	50%	35’
	Townhouse	3,000 (B)	24’	25’	0’	10’	50%	35’
	Other Uses	6,000 sf.	50’	25’	6’	10’	40%	35’
R-5	Single Family	5,000 sf	40’	25’	6’	10’	35%	35’
	Duplex	2,500 (B)	40’	25’	6’	10’	35%	35’
	Multi-Family	2,500 (B)	40’	25’	6’	10’	50%	35’
	Townhouse	2,500 sf.	24’	20’	0’	10’	50%	35’
	Zero Lot Line	2,500 sf.	35’	20’	0-10’	10’	50%	35’
	Other Uses	5,000 sf.	40’	25’	6’	10’	40%	35’
R-4	Single Family	4,000 sf.	35’	20’	5’	10’	40%	35’
	Duplex	2,000 (B)	35’	20’	5’	10’	40%	35’
	Multi-Family	1,000 (B)	35’	20’	5’(D)	10’(D)	50%	65’
	Townhouse	2,000 sf.	20’	15’	0’	10’	60%	35’
	Zero Lot Line	2,000 sf.	30’	15’	0-10’	10’	60%	35’
	Other Uses	4,000 sf.	35’	20’	5’	10’	50%	65’
B-1	All Uses	3,000 sf.	25’	15’	(C)	10’	N/R	35’
B-2	All Uses	3,000 sf.	25’	15’	(C)	(E)	N/R	45’
B-3	Residential	Same as R-4						
	Other Uses	N/R	25’	N/R	(C)	(E)	N/R	65’
I-1	All Uses	N/R	30’	20’	10’	15’	N/R	45’
I-2	All Uses	N/R	50’	25’	10’	15’	N/R	65’
P-H	All Uses	4,000 sf.	50’	15’	6’	10’	60%	65’
PUD	All Uses	½ Acre	N/A	N/A	N/A	N/A	N/A	N/A

(A) Where septic tanks are used. Health Department may require larger area.
(B) Minimum lot area per dwelling unit.
(C) Ten foot minimum when abutting residential zoning districts.
(D) Two additional feet per yard to each floor above the second.
(E) Ten foot minimum when abutting residential zoning districts.
N/R Not Regulated

BLANK PAGE

ARTICLE XV
DEFINITIONS

XV.1 Ordinance Construction

Within this Ordinance "Article" refers to a major subdivision of the Ordinance text, and is indicated by a Roman numeral; "Section" refers to a major subdivision of the text of an Article, and is indicated by a Roman numeral and an Arabic numeral; "Sub-section" refers to a minor subdivision of the text of Section, and is indicated by a Roman numeral, Arabic numeral, and a lower case letter; "Provision" refers to any phrase, clause, sentence, or groups thereof, within the text.

XV.2 Words and Phrases

For the purposes of this Ordinance, all words used in the present tense shall include the future tense; all words in the plural number shall include the singular number, unless the natural construction of the wording indicates otherwise; the word "shall" is mandatory; the word "may" is permissive; and the word "person" includes a firm, association, organization, partnership, corporation, trust and company, as well as an individual; the word "lot" includes the word "plot," "parcel" or "tract"; the words "used" and "occupied" shall include the words "intended, designed, designated or arranged to be used or occupied", and the word "structure" shall include the word "building".

XV.3 Definitions

For the purpose of this Ordinance, certain words or terms used are herein defined. Except as defined herein, all other words used in this Ordinance shall have their customary dictionary definition.

Abutting. Having property or district lines in common; i.e., two lots are abutting if they have property lines in common. Lots are also considered to be abutting if they are directly opposite each other and separated by public right-of-way.

Access. A way of approaching or entering a property. Access also includes ingress, the right to enter, and egress, the right to leave.

Accessory structure or use. A structure or use which:

a. Is subordinate to and serves a principal building or principal use; and

b. Is subordinate in area, extent or purpose to the principal building or principal use; and

c. Contributes to the comfort, convenience or necessity of occupants of the principal building or principal use; and

d. Is located on the same zoning lot as the principal building or principal use, unless otherwise permitted.

Addition. Any construction which increases the bulk, area, or the height of any portion of an existing building or structure.

Adult Uses. Establishments whose activities include the following (or any combination thereof), and which exclude minors by virtue of their age for reasons not related to alcohol:

a. Commercial establishment, offering for sale/display, which have a substantial or significant portion of their stock and trade books, magazines, newspapers, or other printed or written material, or any picture, drawing, photograph, motion picture, or other pictorial representation, or any statue or other figure, or any recording, transcription, or mechanical, chemical or electrical reproduction, or any other articles, equipment, machines, or materials depicting sexual activity.

b. Personal service establishments.

c. Entertainment establishments, whether live or in some other format.

Agricultural Use. The use of a tract of at least five (5) contiguous access for the production of agricultural or horticultural crops, including but not limited to livestock, livestock products, poultry, poultry products, grain, hay, pastures, soybeans, tobacco, timber, orchard fruits, vegetables, flowers or ornamental plants, including provision for dwellings for persons and their families who are engaged in the above agricultural use on the tract, but not including residential building development for sale or lease to the public.

Airport hazard zoning. Regulations governing the height of structures near airport facilities promulgated by the State of Kentucky and approved by the Federal Aviation Administration; and as such zoning relates to the City of Ashland, it is by reference incorporated into this Ordinance.

Alley. A public way (not a street) intended as only a secondary means of access to abutting property and not intended for general traffic circulation.

Alteration. Any change or modification in construction, exit facilities, building equipment or permanent fixtures which does not include an addition to an existing building.

Apartment. A room or a suite of rooms occupied, or which is intended or designed to be occupied, as the home or residence of one individual, family or household, for housekeeping purposes; and which as separate kitchen and bath facilities.

As-of-right Permitted Land Use. Land uses and development standards which are determined in advance, and specifically authorized by this Zoning Ordinance.

Automobile Service Station. Buildings and premises where gasoline, oil, grease, batteries and tires and automobile accessories shall be supplied and dispensed and retailed and where, in addition, the following services may be rendered, and sales made, and no other:

a. Sale and servicing of spark plugs, batteries and distributors and distributors parts;

b. Tire servicing and repairs but not recapping or regrooving;

c. The replacement of mufflers and tail pipes, water hoses, fan belts, brake fluid, light bulbs, fuses, floor mats, seat covers, windshield wipers and wiper blades, grease retainers, wheel bearings, mirrors, and the like;

d. Radiator cleaning and flushing;

e. Washing and polishing and sale of automotive washing and polishing materials;

f. Greasing and lubrication;

g. Providing and repairing fuel pumps, oil pumps and lines;

h. Minor servicing and repair of carburetors;

i. Emergency wiring repairs;

j. Adjusting and repairing brakes;

k. Minor motor adjustments, not involving removal of the head or crankcase or racing the motor;

l. Sales of cold drinks, packaged food, tobacco and similar convenience goods for filling station customers, as accessory and incidental to principal operations.

m. Provision of road maps and other information materials to customers, provision of restroom facilities.

n. Uses permissible at a service station do not include major mechanical and body work, straightening of body parts, painting, welding, storage of automobiles not in operation condition, or other characteristics to an extent greater than normally found in service stations. A service station is not a repair garage nor a body shop.

For the purposes of this Ordinance, an automobile service station shall include a self-service station which is defined as that portion of property where flammable and combustible liquids used as motor fuels are stored and subsequently dispensed from fixed approved dispensing equipment into the fuel tanks of motor vehicles by persons other than the service station attendant, and which may include facilities available, for the sale of other retail parts. All automobile service stations, including self-service stations shall conform to the requirements of other applicable federal, state, and local laws.

Bed and Breakfast Facility. A use which provides short-term transient lodging, including serving only breakfast to overnight lodgers, for which rent is paid.

Beekeeping Operations. The maintenance of honeybee colonies, commonly in man-made hives, by humans. A beekeeper keeps the bees in order to collect their honey and other products that the hive produces (including beeswax, propolis, pollen, and royal jelly), to pollinate crops, or to produce bees for sale to other beekeepers.

Block. A piece of land usually bounded on all sides by streets or other transportation routes such as railroad lines, or by physical barriers such as water bodies or public open spaces, and not traversed by a through street.

Block Face. A street segment, and the properties on both sides of the street segment, between two intersecting streets.

Board of Zoning Adjustment. A local body, created by ordinance, whose responsibility is to hear appeals from decisions of the zoning administrator, and to consider requests for variances and conditional use permits permissible under terms of the Zoning Ordinance.

Boarding House, Rooming House. A Dwelling (single family or multiple) or rooming house, where rooms are rented and meals are served for compensation to not less than three (3) and not more than nine (9) individuals.

Buildable Area. The space remaining on a zoning lot after the minimum open-space requirements (yard, setback) have been met.

Building. Any structure enclosed and isolated by exterior walls constructed or used for residence, business, industry, or other public or private purpose, or accessory thereto, and including trailers or mobile homes, and attached carports consisting of a roof and supporting members, and similar structures whether stationary or movable.

Building Height. The vertical distance measured from the average elevation of the finished lot grade at the front building line to the highest point of the roof beams adjacent to the front of the wall in the case of a flat roof, to the deck line in the case of a mansard roof, or to the average height of the gables.

Building Setback Line. A line establishing the minimum allowable distance between the nearest portion of any building, and the nearest property line when measured perpendicularly thereto.

Buffer. A strip of land, identified in the Zoning Ordinance, established to protect and separate one type of land use from another.

Cannabis business. An entity licensed under KRS 218B as a cultivator, dispensary, processor, producer, or safety compliance facility. Such licensed businesses shall not be located within one thousand (1,000) feet of an existing elementary or secondary school or a daycare center. For the purpose of this regulation, one thousand (1,000) feet shall be measured in a straight line from the nearest property line of an existing elementary school, secondary school, or daycare center to the nearest property line of the proposed location of a cannabis business.

Canopy, Marquee or Awning. Any roof-like structure extending from a building façade.

Certificate of Occupancy. Official certification that a premise conforms to provisions of the Zoning Ordinance and Building Code, and may be used or occupied. Such a certificate is granted for new construction or for alteration or additions to existing structures, or when the nature of a land use changes. Unless such a certificate is validated, a structure cannot be occupied or used.

City, City Administration. Where provisions of this Ordinance require City administration approval, it shall mean the City Manager and/or employees designated by the City Manager to act upon such matter.

Clinic, Medical and Dental. A building housing facilities for two or more licensed physicians, dentists, or other similar practitioners.

Common Open Space. An area of land or water, or a combination of both land and water within a site designated for development, and designed and intended for the use and enjoyment of residents of the development or for the general public; not including streets or off-street parking areas. Common open space shall be substantially free of structures, but may contain such improvements as are in the plan as finally approved and as appropriate for the benefit of the users.

Condominium. A dwelling unit which the ownership or the occupancy rights to the dwelling unit is individually owned or for sale to any individual and such ownership is not inclusive of any land; and established in compliance with Chapter 381 of the Kentucky Revised Statutes.

Conditional Use. A use which is essential to or, would promote the public health, safety, or welfare in one (1) or more zones, but would impair the integrity and character of the zone in which it is located, or in adjoining zones, unless restrictions on location, size, extent, and character of performance are imposed in addition to those imposed in the zoning regulations.

Conversion. Changing the original purpose of a building or lot to a different use.

Covenant. A private legal restriction on the use of land, contained in the deed to the property or otherwise formally recorded. There may be certain legal requirements for formal establishment of a covenant such as a written document, a mutual interest in the property, that the covenant be concerned with the use of the land rather than individual characteristics of ownership, etc. The Zoning Ordinance does not regulate or enforce covenants.

Craft Beverage/Distilled Spirit Production (large scale). Establishments engaged in on-site brewing or distilling in excess of 50,000 barrels of beer or ale or 50,000 gallons of distilled spirit annually for retail distribution. These establishments are primarily used for the production of beer and ale or distilled spirits and may not include food service as an accessory use but may include an on-site tasting room. The operation processes ingredients to make beer and ale or distilled spirits by mashing, cooking, and fermenting.

1. All processing, production, manufacturing, distilling, brewing, bottling associated with such establishment shall be located within a fully enclosed building.

2. Outdoor storage of materials, equipment, or supplies associated with such use is not allowed, unless otherwise allowed by the underlying zoning.

Data Center. A building, portion of a building, group of buildings, campus, or development whose primary purpose is housing networked computer servers, data storage systems, telecommunications equipment, or specialized computing hardware for the commercial or institutional processing, storage, management, mining, modeling, analysis, or transmission of data. The term includes cloud-computing, colocation, artificial intelligence, high-performance

computing, server farm, and commercial cryptocurrency mining facilities and includes all Data Center Supporting Infrastructure and Data Center Energy Systems serving the use, regardless of ownership, lease arrangement, parcel boundaries, or development phase. A facility designed, marketed, leased, or operated principally for colocation, cloud computing, artificial intelligence computing, high-performance computing, cryptocurrency mining, or commercial data-processing services constitutes a Data Center regardless of its floor area, electrical demand, ownership structure, or characterization by the applicant. The term does not include a customary information technology or server room that is subordinate and incidental to another lawful principal use, is used exclusively to support the on-site operations of that principal use and not provide colocation, cloud-computing, cryptocurrency mining, artificial intelligence, high-performance computing, or data-processing services to third parties. All server rooms, computing equipment, and associated electrical capacity located on functionally related parcels or under common ownership, operation, or control shall be aggregated. Equipment, floor area, or electrical capacity shall not be divided, phased, separately metered, or otherwise arranged to avoid classification as a Data Center.

Data Center Energy System. Any generator, engine, turbine, battery energy storage system, fuel storage facility, substation, transformer yard, switchgear, electric distribution equipment, or other energy generation or energy storage system used or intended to serve a Data Center during normal, backup, emergency, commissioning, or testing operations. The term does not include a utility service facility exempt from local zoning under KRS 100.324; however, all information concerning any such facility proposed to serve the Data Center shall be disclosed with the application to the fullest extent permitted by law.

Data Center Site. All contiguous, adjacent, or functionally related parcels and easements under common ownership, lease, development agreement, management, or control that contain or are proposed to contain a Data Center, Data Center Supporting Infrastructure, or a Data Center Energy System. Interior parcel lines within the Data Center Site shall be disregarded when applying the requirements of this section.

Data Center Supporting Infrastructure. Any building, structure, equipment, road, rail spur, cooling system, air handler, chiller, cooling tower, water storage or treatment facility, wastewater or stormwater facility, pump station, fiber-optic facility, administrative or security building, loading area, fuel system, fire-suppression system, utility facility, or other improvement that supports or is intended to support a Data Center.

Day. Unless specifically mentioned otherwise in the text, day shall refer to calendar days, including weekends and holidays.

Day Care. Any child care arrangement under which a child less than thirteen (13) years of age receives care away from his own home by persons other than his parents, grandparents, guardians or full-time custodians.

Day Care Center/Nursery. Any child care arrangement which provides day care on a regular basis for more than four (4) hours per day, more than five (5) children, wherever operated and whether or not operated for profit, except that the following are not included; public schools, non-public schools whether or not accredited, which regularly and exclusively provide a course of grade school instruction to children who are public school age; summer camps having children in full-

time residence; summer day camps; and Bible schools normally conducted during vacation periods.

Dedication. The offer to transfer property from private to public ownership. Such transaction is not completed unless and until the appropriate public agency accepts the offer.

Density. The average number of families, persons, or housing units per unit of land.

Dwelling, Single-Family. A detached residential dwelling unit designed for and occupied by one family only. This definition does not include mobile homes or manufactured homes, but does include Manufactured Homes, Qualified.

Dwelling, Tiny Home. A principal single-family dwelling which is 400 or less square feet in floor area excluding lofts that is affixed to a permanent foundation and complies with the Kentucky Residential Code.

Dwelling, Townhouse, Attached. A single family dwelling unit erected in a row as part of a single building, on separate adjoining lots, each being separated from adjoining units by an approved fire resistant party wall. See Section II.11.

Dwelling, Two-Family, Duplex. A detached residential building containing two dwelling units, other than a mobile home, designed for occupancy by not more than two families, with separate bath and kitchen facilities for each unit.

Dwelling, Multi-Family. A residential building designed for or occupied by three or more families, with the number of families in residence not exceeding the number of dwelling units provided, with separate bath and kitchen facilities for each unit; and further designated by the following sub-categories:

a. Small scale: one structure per lot and no more than four (4) units.

b. Mid scale: one or more structure per lot and between five (5) and eight (8) units.

c. Large scale: more than one structure per lot and/or more than eight (8) units.

Dwelling Unit. One room, or rooms connected together, constituting a separate, independent housekeeping establishment for owner occupancy, or rental or lease, physically separated from other dwelling units which may be in the same structure, and containing independent cooking, bath, and sleeping facilities.

Dwelling, Zero Lot Line. A detached single family dwelling unit which is constructed against one side lot line. See Section II.12.

Easement. A right given by the owner of land to another party for specific limited use of that land. For example, a property owner may give an easement on this property to allow utility facilities, like power lines or pipelines, to allow light to reach a neighbor's windows, or to allow access to another property.

Eating/Drinking Establishment. Sale of prepared food and/or beverages for on- and off-premises consumption. Typical uses include restaurants, taverns and craft beverage production.

a. Restaurant: Establishments primarily engaged in the retail sale of prepared food for consumption on or off the premises. Such establishments may sell or serve beer, ale, wine or liquor.

    1. Where permitted, a restaurant may include drive-in or drive-through service where food and/or beverages are sold in a form ready for consumption and where a significant portion of the consumption takes place or is designed to take place outside the confines of the building. Such use often includes an intercom or speaker system, a menu board, and an outside service window and may include vehicular attendant service.

b. Tavern: Establishments primarily engaged in the retail sale of alcoholic drinks such as beer, ale, wine, and liquor for consumption on the premises. Such establishments may sell or serve food.

c. Craft Beverage/Distilled Spirit Production (small scale): Establishments engaged in on-site brewing or distilling and sales of the product for on- or off-premise consumption. These establishments are primarily used for the production of beer and ale or distilled spirits and may include retail and food service as an accessory use. The operation processes ingredients to make beer and ale or distilled spirits by mashing, cooking, and fermenting.

    1. All processing, production, manufacturing, distilling, brewing, bottling associated with such establishment shall be located within a fully enclosed building.

    2. Outdoor storage of materials, equipment, or supplies associated with such use is not allowed, unless otherwise allowed by the underlying zoning.

    3. On site production cannot exceed 50,000 barrels of beer or ale or 50,000 gallons of distilled spirit annually.

Educational Institution. A preprimary, primary, or grammar, public, parochial or private school; a high school, preparatory school or academy, public or founded or owned or conducted by or under the sponsorship of a religious or charitable organization, a private preparatory school or academy furnishing courses of instruction substantially equivalent to the courses offered by public high schools for preparation of admission to colleges or universities which award BA or BS degrees; a junior college or university, public or founded or conducted by or under the sponsorship of a religious or charitable organization or a private school when not conducted as a commercial enterprise for the profit of individual owners or stockholders. This definition shall not be deemed to include trade or business schools nor a home-based educational program that is operated from a residential dwelling.

Expenditures. A sum of money paid out in return for some benefit or to fulfill some obligation. Whenever the term is used it includes binding, contractual commitments to make future expenditures, as well as any other substantial changes in position.

Family. One or more persons living together as a single housekeeping unit. For the purposes of this ordinance such persons may include gratuitous guests and domestic servants employed on the same premises. Four (4) or fewer unrelated adults are considered a family.

Family Care Home. A facility which provides resident care for four (4) or fewer individuals of whom one or more are unrelated, who for various reasons cannot reside with their families or independently. Service and supervision are provided according to the individual needs. Family care homes are considered single family dwellings, and are regulated as such.

Finding. A determination or conclusion based on the evidence presented and prepared by a hearings body in support of its decision.

Flood Hazard Area. Land areas identified by the Federal Insurance Administration as having a one percent (1%) chance of flooding in any given year.

Fortunetelling. Means predicting the future or reading the past, using psychic power, clairvoyance, phrenology, consulting with spirits, reading tea leaves, tarot cards or any other object or device, crystal gazing, palm reading, mind reading, telepathy, astrology, necromancy or any other type of purported occult or supernatural powers.

Game Room. The commercial use of electronic/mechanical games, bingo/card tables, and the like where three (3) or more such games or tables are located on a premises. A lesser number at a commercial establishment shall be considered accessory to a permitted commercial use.

Garage, Commercial and Public. A structure or land area where the principal use is for the storage of vehicles for compensation.

Garage, Private. A building or space used as an accessory to or a part of the main building permitted in any district that provides storage space for motor vehicles and in which no business, occupation or service for profit is in any way conducted, unless specifically allowed by this Ordinance.

Gross Floor Area. The total habitable or occupied floor area enclosed within a building.

Group Care Home. A facility which provides resident care for four (4) or more, but less than twenty-one (21) children, adolescents, or adults who, for various reasons cannot reside with their families or independently. Adult supervised care is provided, as well as a program of service in a home setting. This category is limited to uses licensed or supervised by a federal, state, or county human services agency; and includes uses such as foster homes, half-way houses, resident schools, and battered spouse centers.

Gun Range, Indoor. A fully enclosed building or part of a fully enclosed building designed and operated by a person for the shooting of firearms and not available for that use by the general public without payment of a fee, membership contribution, or dues, or by invitation of an

authorized person. The building shall have safeguards in place to prevent any projectile from exiting the building and continued to be maintained as long as the building is utilized as an indoor gun range.

Home Occupation. An accessory use of a residential dwelling for gainful employment that is clearly incidental to the principal residential use. See Section II.

Hospitality House. A facility which provides temporary sleeping and dining accommodations; operates completely on donations and gifts from guests and friends; does not exceed 25 sleeping rooms; and is operated for the use of patients, relatives, and supporting friends referred by a hospital for patients receiving treatment at a hospital in the City of Ashland (Ord 22, 2001).

Hotel, Motel. A building or group of buildings or other structure used, maintained, advertised as or held out to the public to be a place where sleeping accommodations are available for compensation to transient or permanent guests or tenants, and in which ten (10) or more rooms are furnished for the accommodation of such guests. Such facilities may have one or more dining rooms or restaurants where meals are served to such transients or permanent guests. Sleeping accommodations and dining rooms or restaurants, if existing, shall be located in the same building or buildings in connection therewith. Gift shops, lounges, and personal services are often incidental accessories to hotels and motels.

Household Pets. Animals normally and traditionally considered "pets". This classification does not include animals kept, raised, and bred for commercial purposes, except the incidental breeding and littering/whelping/birthing of such animals for fee or subsequent sale. This classification does not include animals normally and traditionally considered farm animals, such as horses, poultry, and bees; and does not include undomesticated animals.

Indirectly Illuminated. A structure illuminated by an external light directed primarily toward such structure. Such illumination shall be shielded that no direct rays from the light are visible elsewhere than on the lot where said illumination occurs.

Inoperative Vehicle. Any vehicle, designed to be self-propelled, which, by virtue of broken or missing component parts, is no longer capable of self-propulsion and remains in such condition for more than thirty (30) days.

Intensity. The degree to which land is used. While frequently used synonymously with density, intensity has a somewhat broader meaning, referring to levels of concentration or activity in uses such as residential, commercial, industrial, recreation, or parking.

Landscaping. Changing, rearranging, or adding to the original vegetation or scenery of a lot to produce an aesthetic effect appropriate for the use to which the land is put. It may include reshaping the land by moving the earth, as well as preserving the original vegetation or adding vegetation.

Loading space, off-street. Space logically and conveniently located for bulk pickups and deliveries, scaled to delivery vehicles expected to be used, and accessible to such vehicles. Required off-street loading space is not to be included as off-street parking space in computation of required off-street parking space.

Lot, Zoning Lot. For the purposes of this Ordinance, a zoning lot is a parcel of land for use and development, of at least sufficient size to meet minimum zoning requirements for its use, coverage, and to provide such yards and other open spaces as are herein required. Such lots shall have frontage on an improved public street and may consist of:

a. A single lot of record;

b. A portion of a lot of record;

c. A combination of complete lots of record, of complete lots of record and portions of lots of record, or of portions of lots of record;

d. A parcel of land described by metes and bounds; provided that in no case of division or combination shall any lots be created which do not meet requirements of this Ordinance.

Lot Coverage. A ratio, expressed in percent, of the area of a zoning lot occupied by principal and accessory structures/uses in relation to the total lot area.

Lot Depth. The distance between the front lot line and the rear lot line, measured from the midpoint of the front lot line to the midpoint of the rear lot line.

Lot Frontage. The frontage, or front, of a lot is defined as the side abutting the street. For the purposes of determining yard requirements on corner lots and through lots, all sides of a lot adjacent to streets shall be considered frontage, and yards shall be provided as indicated by Article II.

Lot Line, Side. The distance along a lot boundary which connects the front and rear lot lines.

Lot Line, Rear. The rear lot line is that opposite to the front lot line. Where lot lines are irregular, the rear lot line shall be assumed to be a line not less than twenty (20) feet long, lying within the lot and parallel to the front lot line at its midpoint.

Lot of Record. A lot which is a part of a subdivision, a plat of which has been recorded in the office of the County Clerk of Boyd County, or a lot described by metes and bounds, the description of which has been so recorded.

Lot Types. The diagram (below) illustrates terminology used in this Ordinance with reference to corner lots, interior lots, double frontage lots and through lots; in the diagram a corner lot (A) is defined as a lot located at the intersection of two (2) or more streets. A lot abutting on a curved street or streets shall be considered a corner lot if straight lines drawn from the foremost points of the side lot lines to the foremost point of the lot meet at an interior angle of less than one hundred and thirty-five (135) degrees. See lot marked (A-1) in the diagram. An interior lot (B) is defined as a lot other than a corner lot with only one frontage on a street. A through lot (C) is defined as a lot other than a corner lot with a frontage on more than one street. Through lots abutting two (2) streets may be referred to as double frontage lots. A reversed frontage lot (D) is defined as a lot

on which the frontage is at right angles or approximately right angles (interior angles less than one hundred and thirty-five (135) degrees to the general pattern in the area.

A reversed frontage lot may also be a corner lot (A-D in the diagram), and interior lot (B-D) or a through lot (C-D).

This illustrates the basic types of lots:
A=Corner Lot, B=Interior Lot, C=Through (or double frontage)Lot, D=Reversed Frontage Lot

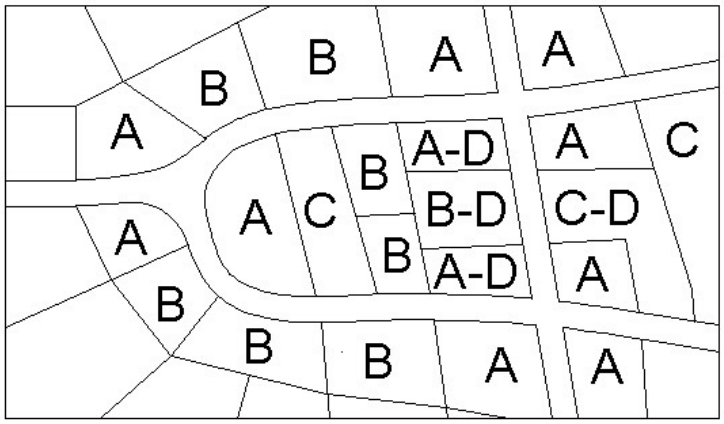

Lot Width. The distance between the side lot lines of a lot measured at right angles to the depth and at the required front yard setback line.

Manufactured Home. A single-family residential dwelling constructed after June 15, 1976, in accordance with the National Manufactured Home Construction and Safety Standards Act of 1974, 42 U.S.C. Section 5401, et seq., as amended, and designed to be used as a single-family residential dwelling with or without permanent foundation when connected to the required utilities, and which includes the plumbing, heating, air conditioning, and electrical systems contained therein.

Manufactured Home, Qualified. A manufactured home that meets all of the following criteria:

17. Is manufactured on a date not to exceed five (5) years prior to the date of installation and has all parts that operate only during transport removed;
18. Is affixed to a permanent foundation and is connect to the appropriate facilities and is installed in compliance with KRS 227.570;
19. Has a width of at least twenty (20) feet at its smallest width measurement or is two (2) stories in height and oriented on the lot or parcel so that its main entrance door faces the street; and
20. Has a minimum total living area of nine hundred (900) square feet;
21. A manufactured home that does not meet the minimum width of twenty (20) feet or minimum total living area of nine hundred (900) square feet may be treated as a qualified manufactured home for purposes of this definition if:
    a. The setback requirements or lot dimensions would not reasonably accommodate a home meeting these minimum dimensions;
    b. The home is the maximum width and square footage that would reasonably fit on the lot while complying with all applicable setback requirements and other zoning regulations; and

c. The home otherwise meets all other requirements of a qualified manufactured home under this definition.

Medicinal cannabis. Marijuana as defined in KRS 218A.010 when cultivated, harvested, processed, produced, transported, dispensed, distributed, sold, possessed, or used in accordance with KRS 218B. This definition includes medicinal cannabis products and raw plant material; but does not include industrial hemp or industrial hemp products as defined in KRS 260.850.

Medicinal cannabis cultivator. A business that is licensed in compliance with KRS 218B to:

d. Acquire, possess, plant, cultivate, raise, harvest, trim, or store cannabis seeds, seedlings, plants, or raw plant material;

e. Deliver, transport, transfer, supply, or sell raw plant material or related supplies to other licensed cannabis business in this state;

f. Sell cannabis seeds or seedlings to similar entities that are licensed to cultivate cannabis in this state or in any other jurisdiction.

Medicinal cannabis cultivators are regulated by KRS 218B in four tiers, as follows:

1. A Tier I cultivator shall not exceed an indoor growth area of two thousand five hundred (2,500) square feet.

2. A Tier II cultivator shall not exceed an indoor growth area of ten thousand (10,000) square feet.
3. A Tier III cultivator shall not exceed an indoor growth area of twenty-five thousand (25,000) square feet.

4. A Tier IV cultivator shall not exceed an indoor growth area of fifty thousand (50,000) square feet.

Medicinal cannabis dispensary. A business that is licensed in compliance with KRS 218B to:

a. Acquire or possess medicinal cannabis from a cultivator, processor, or producer in this state;

b. Acquire or possess medicinal cannabis accessories or educational materials;

c. Supply, sell, dispense, distribute, or deliver medicinal cannabis, medicinal cannabis accessories, and educational material to cardholders or other dispensaries;

d. Sell cannabis seeds to similar entities that are licensed to cultivate cannabis in this state or in any other jurisdiction; or

e. Acquire, accept, or receive medicinal cannabis products from a cardholder pursuant to KRS 218B.110.

Medicinal cannabis processor. A business that is licensed in compliance with KRS 218B to:

a. Acquire or purchase raw plant material from a cultivator, processor, or producer in this state;

b. Possess, process, prepare, manufacture, manipulate, blend, or package medicinal cannabis;

c. Transfer, transport, supply, or sell medicinal cannabis and related supplies to other cannabis businesses in this state; or

d. Sell cannabis seeds or seedlings to similar entities that are licensed to cultivate cannabis in this state or in any other jurisdiction.

Medicinal cannabis producer. A business that is licensed in compliance with KRS 218B to:

a. Acquire, possess, plant, cultivate; raise; harvest; trim; or store cannabis seeds, seedlings, plants, or raw plant material;

b. Deliver, transport, transfer, supply, or sell raw plant material, medicinal cannabis products, or related supplies to other licensed cannabis businesses in this state;

c. Sell cannabis seeds or seedlings to similar entities that are licensed to cultivate cannabis in this state or in any other jurisdiction;

d. Acquire or purchase raw plant material from a cultivator in this state; or

e. Possess, process, prepare, manufacture, manipulate, blend, or package medicinal cannabis.

Medicinal cannabis safety compliance facility. A business that is licensed in compliance with KRS 218B to:

a. Acquire or possess medicinal cannabis obtained from cardholders or cannabis business in this state;

b. Return the medicinal cannabis to cardholders or cannabis business in this state;

c. Transport medicinal cannabis that was produced by cannabis businesses in this state;

d. Produce or sell approved educational materials related to the use of medicinal cannabis;

e. Produce, sell, or transport equipment or materials other than medicinal cannabis, including but not limited to lab equipment and packaging materials that are used by cannabis businesses and cardholders, to cardholders or cannabis businesses licensed in compliance with KRS 218B;

f. Test medicinal cannabis produced in this state, including testing for cannabinoid content, pesticides, mold, contamination, vitamin E acetate, and other prohibited additives;

g. Train cardholders and cannabis business agents;

h. Receive compensation for actions allowed under KRS 218B.125;

i. Engage in any noncannabis-related business activities that are not otherwise prohibited or restricted by state law.

Metes and Bounds. A system of describing and identifying land by measures (metes) and direction (bounds) from an identifiable point of reference such as a monument or other marker.

Mobile Home. A structure manufactured prior to June 15, 1976, that was not required to be constructed in accordance with the National Manufactured Housing Construction in Safety Standards Act, that is transportable in one (1) or more sections, that, in the traveling mode is eight (8) body feet or more in width and forty (40) body feet or more in length, or when erected on site, four hundred (400) or more square feet, and that is built on a permanent chassis and designed to be used as a dwelling on a temporary or permanent foundation, when connected with the permanent required utilities, including plumbing, heating, air conditioning, and electrical systems.

Mobile Home Park. A parcel or tract of land under single ownership which has been planned and improved for the placement of mobile homes for dwelling purposes.

Mobile Home Space. Shall mean a plot of ground, within a mobile home park, designed to accommodate one mobile home.

Mobile Home Stand. That part of an individual mobile home space reserved for the placement of the mobile home and additions or attachments thereto.

Modular Home. A dwelling unit constructed with one or more modules which are prefabricated and hauled to the site that are capable of producing a dwelling which is indistinguishable from conventionally built homes and which meets the construction requirements of the Kentucky Building Code, as amended.

Motel. (See definition of "Hotel").

Nameplate. A non-electrical sign identifying only the name, occupation and/or profession of the occupant of premises on which the sign is located. For residential structures, a nameplate may identify the name of the owner or occupant and/or property numbers. Maximum area of a nameplate shall not exceed two (2) square feet per occupant. If a larger or more than one nameplate is necessary, the total square footage allowed shall not exceed eight (8) square feet per building.

Nonconforming Lot. A lot existing at the effective date of this ordinance or any amendment to it (and not created for the purpose of evading the restrictions of this ordinance) that cannot meet the minimum area or lot width requirements of the district in which the lot is located.

Nonconforming Project. Any structure, development, or undertaking that is incomplete at the effective date of this Ordinance, (or amendment thereto) and would be inconsistent with any applicable new regulations of the district in which it is located if completed as proposed or planned.

Nonconforming Sign. Any sign not in compliance with the provisions of this Ordinance as of the effective date of its adoption, (or amendment thereto) or any sign erected after the effective date of this Ordinance (or amendment thereto) which does not comply with all of its provisions.

Nonconforming Situation. A situation that occurs when, on the effective date of this Ordinance or any amendment to it, an existing lot or structure or use of an existing lot or structure does not conform to one or more of the regulations applicable to the district in which the lot or structure is located. Among other possibilities, a nonconforming situation may arise because a lot does not meet minimum area requirements, because structures do not satisfy maximum existing buildings and the land (in such matters as density and setback requirements) is not in conformity with the Ordinance, or because land or buildings are used for purposes made unlawful by the Ordinance.

Nonconforming Structure. A building or structure which is being used for a conforming use, but which does not meet the requirements of this Ordinance (or amendment thereto).

Nonconforming Use. A nonconforming situation that occurs when property is used for a purpose or in a manner made unlawful by the use regulations applicable to the district in which the property is located. The term also refers to the activities that constitute the use made of the property.

Nursing, Convalescent Home. An institution, which is advertised, announced, or maintained for the express or implied purpose of providing nursing or convalescent care for persons unrelated to the licensee. A nursing home is a home for chronic or convalescent patients who, on admission are not (as a rule) acutely ill and who do not usually require special facilities, such as an operating room, X-ray facilities, laboratory facilities, on obstetrical facilities. A nursing home provides care for persons who have remedial ailments or other ailments, for which continuing medical and skilled nursing care is indicated; who, however, are not ailing enough to require general hospital care. Nursing care is their primary need, but they will require continuing medical supervision. A major factor which distinguishes nursing homes is that the residents will require the individualization of continued and routine medical care.

Nuisance. Anything that interferes with the use or enjoyment of property, endangers personal health or safety, or is offensive to the senses.

Ordinance. This Zoning Ordinance, including any amendments, unless otherwise indicated. Whenever the effective date of the ordinance is referred to, the reference includes the effective date of any amendment to it.

Outdoor advertising structure. Any sign or billboard which directs attention to a business, commodity, service, or entertainment not conducted, sold or offered on the premises where the sign is located.

Outdoor (outside) Storage. The placement of any item outside of an enclosed building for a period of more than forty-eight (48) hours shall be considered outdoor storage. In the instance of vehicles,

outdoor storage shall in addition mean the routine and reoccurring (more than twice a week) parking of such vehicle for more than six (6) hours at a time.

Owner. Any person, firm or corporation, lessee, receiver, trustee, guardian, or personal representative, holding legal title or right to occupy or carry on business in a structure or any facility. Where there is more than one owner, as defined, their duties and obligations under this Ordinance are joint, and several.

Parcel. A lot, or contiguous group of lots in single ownership or under single control, and usually considered a unit for purposes of development.

Parking Space, Off-Street. For the purposes of this Ordinance, an off-street parking space shall consist of a space adequate for parking an automobile off the public right-of-way with room for opening doors on both sides, together with properly related access to a public street or alley and maneuvering room.

Paving. The installation of an all-weather hard surface material that must be asphalt or concrete. Gravel or stone of any type is NOT permitted as a final surface material.

Permanent Makeup. A tattoo, whether permanent, semipermanent, or temporary, by someone other than a licensed physician, which includes but is not limited to eyebrows, eyelids, lips, and other parts of the body for beauty marks, hair imitation, lash enhancement, or areola repigmentation. This term includes any procedures whether referred to as, but not limited to, "permanent makeup", "microdermapigmentation", "micropigment implantation", "microblading", "micro-needling with the use of pigment", dermagraphics", "cosmetic tattooing", or any other similar procedures but shall not include "fine line tattooing". For the purposes of the Zoning Ordinance, application of permanent makeup shall not be considered an Adult Use.

Permitted Use. A use by right which is specifically authorized in a particular zoning district. It is contrasted with a conditional use which is authorized only if certain requirements are met and after review and approval by the Board of Zoning Adjustment or other public body.

Personal Service. A land use activity where, for compensation, a customer receives services of a personal, as opposed to a professional, or retail nature. Personal service is distinguished by the customer obtaining a household or bodily service; and such activities include, among others: barber, cosmetologist, manicurist, hairdresser, individual tailoring, tanning salon, and permanent makeup.

Planned Unit Development (PUD). A form of development usually characterized by a unified site design for a number of housing units, clustering buildings; and providing common open space, density increases, and a mix of building types and land uses. It permits the planning of a project and the calculation of densities over the entire development, rather than on an individual lot-by-lot basis.

Planning Commission. The public agency established by City ordinance to prepare a comprehensive plan and to evaluate proposed changes in land use, either by public or private developers, for conformance with the plan. The Planning Commission hears, deliberates, and makes recommendations to City Commission on all zoning ordinance and map amendments.

Plat. A map showing the location, boundaries, and ownership of individual properties.

Plot. A term referring to a piece of useable property, often used synonymously with parcel or lot.

Premise, Premises. A single piece of property as conveyed in a deed, or a lot or a number of adjacent lots on which is situated a land use, a building, or group of buildings designed as a unit, or on which a building or a group of buildings are to be constructed.

Principal Structure or Building. A structure or building containing the principal use of the lot.

Principal Use. The primary purpose or function that a lot serves or is intended to serve.

Private Drive, Road, or Street. Any road or street, within a mobile home park, large scale multi-family housing project, shopping center, industrial park or planned unit development which is not publicly maintained and is used for access by the occupants of the development, their guests and the general public.

Professional Service. A land use activity where, for compensation, a customer receives the services of a "professional", as opposed to a personal or retail, nature. Professional service is distinguished by the long and intensive academic preparation of the provider.

Public Sewer. A sewage system which is owned by the City of Ashland, by any other unit of government or authority, or by a private corporation, person or association, and which is designed to serve uses locating along existing lines or within the service area of the system, should additional collection lines be constructed.

Public Water Supply System. Any approved system furnishing potable (drinkable) water for ten or more residences or businesses or a combination of residences and businesses.

Recreational Vehicle. A vehicular type portable structure without permanent foundation, which can be towed, hauled or driven and primarily designed as temporary living accommodation for recreational, camping and travel use and including but not limited to travel trailers, truck campers, camping trailers and self-propelled motor homes.

Retail. The business of selling personal property directly to the ultimate consumer for any purpose other than resale.

Restricted Use Classification. Language in Kentucky Revised Statutes, Chapter 100, Section 253, referring to nonconforming uses.

Retirement Home, Congregate Living Center. A multi-family residential complex with individual apartments, which offers both independent and assisted independent living quarters for the elderly. This classification differs from a nursing home in the fact that it has individual apartments, even though common kitchen, dining, and recreation areas may be available. Nursing care may be available under this classification, on a limited and emergency-rather than routine-basis.

Rezoning. An amendment to or a change in the Zoning Ordinance. Rezoning can take three forms: 1) a comprehensive revision or modification of the zoning text and map; 2) a text change in zone requirements; and 3) a change in the map; i.e., the zoning designation of a particular parcel or parcels.

Rooming House. A building or portion thereof which contains rooms designed or intended to be used for residential occupancy by not less than three (3) nor more than nine (9) individuals for compensation.

Setback. See Yard.

Site Plan. A plan, to scale, showing uses and structures proposed for a zoning lot as required by Article VIII.

Shopping Center. A unified commercial and/or service development of two or more primary use structures, or four or more distinct, individual commercial/service operations in a single structure, which share common off-street parking and loading areas, vehicular access points, and/or utility services. Individual businesses within a shopping center may be serviced by private drives when approved by the City (Ord 18, 1990).

Street. A dedicated and accepted public right-of-way for vehicular traffic and pedestrian circulation. The following classification shall apply:

a. Major Thoroughfare (Arterial): A traffic artery designed primarily to carry heavy volumes of through vehicular traffic as shown on the major street plan.

b. Minor Thoroughfare (Arterial): A street designed to carry high volumes of vehicular traffic as shown on the major street plan.

c. Collector Street: A street designed to carry medium volumes of vehicular traffic, provide access to the major street system and collect the vehicular traffic from the intersecting minor streets.

d. Local Street: A street designed primarily to provide vehicular access to properties abutting it.

e. Cul-de-sac: A street intersecting another street at one end and permanently terminated by a vehicular turn-around at the other.

f. Marginal Access Street: A local or minor service street which parallels and is immediately adjacent to a major street or highway, and which provides access to abutting properties and protection from through traffic and control of intersections with major traffic streets.

Street Line. The right-of-way line of a street.

Structure. Anything constructed or erected with a fixed location on the ground, or attached to something having a fixed location on the ground; may be permanent or temporary.

Subdivision. The division of a parcel of land into two or more lots or parcels; for the purpose, whether immediate or future, of sale, lease, or building development or if a new street is involved, any division of a parcel of land; provided that a division of land for agricultural use and not involving a new street shall not be deemed a subdivision. The term includes re-subdivision and when appropriate to the context, shall relate to the process of subdivision or two the land subdivided; any division or redivision of land into parcels of less than one acre occurring within

twelve (12) months following a division of the same land shall be deemed a subdivision within the meaning of this term.

Tattooing. The act of producing scars on a human being or the act of inserting pigment under the surface of the skin of a human being, by pricking with a needle or otherwise, to produce indelible marks or figures visible through the skin, including the application of permanent makeup. For the purposes of the Zoning Ordinance, the application of permanent makeup shall be considered a Personal Service whereas tattooing shall be considered an Adult Use.

Tourist Home. See rooming house.

Use. The purpose or activity for which a piece of land or its buildings is designed, arranged, or intended, or for which it is occupied or maintained.

Variance. A variance is a relaxation of the terms of the Zoning Ordinance where such variance will not be contrary to the public interest and where, owing to conditions peculiar to the property, and not the result of the action necessary and undue hardship. As used in this Ordinance, a variance is authorized only for height, area, and size of a structure, or size of yards and open spaces; establishment or expansion of a use otherwise prohibited shall not be allowed by variance, nor shall a variance be granted because of the presence of non-conformities in the zoning district or use in an adjoining zoning district.

Warehousing, Warehouse. The storage of goods of any type without retailing on a lot or within a structure; the structure and facilities for such use.

Wholesaling. The selling of goods or merchandise to retailers or jobbers for resale to the ultimate consumer.

Yard. A required open space which shall not be occupied or obstructed by a structure or portion thereof with the exception of minor uses or structures permitted under provisions of this Ordinance. See Article II.

Yard, Front and Depth. A yard extending across the front of a lot which is bounded by the front lot line, the two (2) side lot lines, and a line extending along the yard setback permitted on the lot. Depth of the required front yards shall be measured along a line or lines drawn perpendicular to the front lot line.

Yard, Rear and Depth. A yard extending across the rear of the lot between inner side yard lines and the rear property line. Depth of required rear yards shall be measured along a line or lines drawn perpendicular to the rear lot line.

Yard, Side and Width. A yard extending from the rear line of the required front yard to the rear property line and being parallel to the side lot lines. Width of required side yards shall be measured along a line drawn perpendicular to the side lot line on the side of the lot in question, from the front yard setback line to the rear yard setback line.

Zoning. A police power measure, enacted primarily be general purpose units of local government, in which the community is divided into districts or zones within which permitted and special uses are established; as are regulations governing lot size, building bulk, placement, and other

development standards. Requirements vary from district to district, but they must be uniform within districts. The zoning ordinance consists of two parts: a text and a map.

Zoning Administrator. The person or persons employed by the City of Ashland to enforce this Ordinance.

Zoning District. An area of the city designated in the zoning ordinance text and delineated on the zoning map, in which requirements for the use of land and building and development standards are prescribed. Within each district, all requirements are uniform.

Zoning Lot. See lot.

Zoning Map. The map delineating the boundaries of districts which, along with the zoning text, comprises the zoning ordinance. The Official Zoning map is on file in the office of the Ashland City Clerk.

ARTICLE XVI

APPENDIX - ZONING ORDINANCE AMENDMENTS

ORDINANCE NO.	ARTICLES	SUMMARY OF CHANGES
116, 1988	Article II	Adds residential dwelling units developed above or below ground floor.
126, 1989	Article IV	Changes to Landscape and Buffer requirements.
18, 1990	Article XIV & XV	Adds or changes Table of Permitted Uses and Definitions.
144, 1990	Article XIII	Changes to Day Care Center outdoor play area requirements.
9, 1993	Article I	Establishes the R-E Residential Estate zoning district.
123, 1994	Article XIV	Deletes the following as a Permitted Use in the I-1 Zoning District: leather products manufacture; tanning & finishing; paint manufacture; sawmill; planing operation; tire recapping operation; and soap and candle manufacture.
6, 1995	Article XIII	Adds a non-residential conditional use category to allow professional services use of historic structures.
5, 1998	Article XIV	Amends Table of Permitted Uses to allow restaurants as a permitted use in large scale health care facilities.
6, 1999	Article XIII Article XIV	Adds Communication Antenna attachments. Adds regulations for Planned Unit Development and amends the same in the Table of Permitted Uses.
128, 1999	Article XIII	Adds Warehousing, Mini Storage as a Conditional Use in the B-1 Zoning District and amends the same in the Table of Permitted Uses.
144, 1999	Article XIII Article XIV	Adds non-profit organizations are exempt from Conditional Use Permit Application Fee. Amends Table of Permitted Uses to allow Modular Units as permitted uses in the B-1, B-2, I-1, I-2 and P-H Zoning Districts.
21, 2001	Article XIV	Adds retail sales as a permitted use in the I-1 Zoning District.
22, 2001	Article XIV & XV	Creates definition of Hospitality House and adds same as a conditional use in the P-H Zoning District.
155, 2003	Article XIV	Adds Library as a permitted use in the R-4, R-5, R-6 and R-12 Zoning Districts.

ORDINANCE NO.	ARTICLES	SUMMARY OF CHANGES
18, 2008	Article XIV	Adds Flammable or Hazardous Chemicals, Bulk Storage above ground as a conditional use in the B-2 Zoning Disrict.
158, 2009	Article XIII & XV	Amendment to Procedure for Approval of Conditional Use Permits and amendment to the definition of Conditional Use Permit.
45, 2013	Article XV	Adds definition of Paving
77, 2016	Article XIV	Adds Indoor Gun Range as a conditional use in the B-2, I-1 & I-2 Zoning Districts.
100, 2017	Article XIII & XV	Adds definition and conditional use permit for Bed & Breakfast Facilities.
39, 2018	Article XIII & XV	Adds definition and conditional use permit for Beekeeping Operations.
71, 2021	Article X	Adds new article entitled Cellular Antenna Tower and Small Cell Tower Regulations and renumbering all subsequent articles.
115, 2021	Article XV & XVI	Amend definitions and Table of Permitted Uses by removing the definition and permitted use activity of Restaurant and creating the definitions and permitted use activities of Craft Beverage/Distilled Spirit Production and Eating and Drinking Establishments.
116, 2021	Article XIII	Amends the regulations for Conditional Use Permits, Sub-section (a) Adult Uses.
21, 2024	Article XIII & XV	Add Conditional Use Permit for Keeping of Animals, Non-Household for Educational Institutions and adding definition of Educational Institution.
22, 2024	Article XV	Add definition of Permanent Makeup and Tattooing and amend definition of Personal Service.
113, 2024	Article XIV & XV	Amend Table of Permitted Uses and add definitions for uses related to medicinal cannabis.
175, 2025	Article XIII, XIV & XV	Add definition and use standards and amend Table of Permitted uses for fortunetelling services.
63, 2026	Article II, XIV & XV	Add definitions and land use regulations related to Qualified Manufactured Homes.
67, 2026	Article XIII, XIV & XV	Add definitions and land use regulations related to Recreational Vehicles.
84, 2026	Article XIII, XIV & XV	Add definitions and land use regulations related to Data Centers.

ADDENDUM

ORDINANCE NO. 21, 2012 – SIGN REGULATIONS

AN ORDINANCE OF THE CITY OF ASHLAND, KENTUCKY, ADOPTING THE SIGN REGULATIONS FOR THE CITY OF ASHLAND, KENTUCKY, AND REPEALING ARTICLE VII OF ORDINANCE NO. 101, 1986 COMMONLY KNOWN AND REFERRED TO AS THE "ZONING ORDINANCE" AND REPEALING ORDINANCE NO 56, SERIES OF 1998.

WHEREAS, it has been determined that regulations regarding the display of signs should be removed from the zoning regulations;

NOW THEREFORE, BE IT ORDAINED BY THE CITY OF ASHLAND, KENTUCKY:

SECTION 1. That the City of Ashland, Kentucky, Board of City Commissioners hereby adopts the following sign regulations and repeals Article VII of Ordinance No. 101, 1986, Ordinance No. 56, 1998:

SIGN REGULATIONS

Section 1. PURPOSE

Except for signs requiring a conditional use permit, the purpose of these regulations is to permit such signs that will not, by their reason of size, location, construction, or manner of display endanger the public safety of individuals; confuse, mislead, or obstruct the vision necessary for traffic safety; or otherwise endanger public health, safety, and morals; and to engender a harmonious and aesthetically pleasing environment

Section 2. ADMINISTRATIVE REVIEW, WAIVER OF REQUIREMENTS

The City of Ashland Board of Commissioners may hear and decide cases where it is alleged by an application for a sign permit that there is error in any determination made by the Code Enforcement Officer in the enforcement of this Ordinance; and the Board of Commissioners may waive or modify the technical requirements of this Ordinance as it determines to be in the best public interest.

Section 3. GENERAL REQUIREMENTS

A. No sign of any type nor any part thereof shall be erected, painted, posted, placed or hung except in compliance with these regulations.

B. Each application for a sign permit shall be made in writing upon forms furnished by the Code Enforcement Officer and shall contain or have attached thereto the following information:

1. A drawing approximately to scale showing the design of the sign, including dimensions, method of attachment or support, source of illumination and showing the relationship to any building or structure to which it is or is proposed to be installed or affixed.

2. A plot plan approximately to scale indicating the location of the sign relative to property lines, easements, streets, sidewalks, structures, utilities and other signs.

C. Sign plans shall be submitted to and approved by the Code Enforcement Officer prior to a permit being issued. A record of such applications, plans and the action taken thereon shall be kept in the office of the Code Enforcement Officer.

D. Each applicant before being granted a sign permit shall pay to the City of Ashland a fee for each sign permit. The fee shall be set by the City Commission.

E. In addition to the detailed regulations set forth in other provisions of these Regulations, all signs displayed within the City (including those listed in Section 4) shall comply with the following standards:

1. Obstruction to Exits. No sign shall be erected so as to obstruct any fire escape, required exit, window, or door opening intended as a means of egress.

2. Obstruction to Ventilation or Light. No sign shall be erected which interferes with any opening required for ventilation and/or light to a structure.

3. Clearance from Surface and Underground Utilities. Signs and their supporting structures shall maintain clearance and non-interference with all surface and underground utilities. Furthermore, sign placement shall not interfere with natural or artificial drainage, or surface or underground water.

4. Drainage. The roofs of canopies, awnings, or similar sign structures exceeding fifty (50) square feet shall be drained to prevent dripping or flowage onto sidewalks or streets; and shall be connected to an approved disposal source by adequate conductors.

5. Obstruction to Corner Visibility. No sign or sign structure shall impair the visibility of intersecting streets and drives as defined by Section 7 of these regulations.

6. Setbacks. Unless otherwise specifically regulated herein, signs shall be permitted in required yards, and not on or over the public rights-of-way.

Section 4. SPECIAL SIGN REGULATIONS

The following types of signs are regulated as per the provisions of this Section. In addition to the requirements of these provisions, such signs shall also comply with Sections 3E, 6, 7 and 8. Because these signs may be permitted in several or all of the City zoning districts, because they are temporary in nature, and/or because they provide public service information, these signs need not comply with Section 5.

A. Property identification. Two (2) square feet per occupant, eight (8) square feet maximum per zoning lot, unlighted, displaying only the name/address of the occupant.

B. Flags and governmental insignia. Except in connection with commercial promotions.

C. Legal notices, informational and directional signs erected by a public agency. (Limited to one (1) square foot per five (5) square feet of lot frontage in all zones—maximum of sixty-four (64) square feet).

D. Integral structural features. When cut or set into the building surface, the name, date of erection, and/or address of a structure.

E. Private traffic signs. Directing traffic/parking on private property, limited to three (3) signs no larger than four (4) square feet in area per zoning lot.

F. Sign repair and maintenance. For conforming signs, includes the replacement of copy.

H. Auto service stations. One (1) price of gasoline sign per public street frontage not exceeding eight (8) square feet in are, affixed to an existing sign structure, a canopy support, or flat-mounted on the building; up to six (6) square feet of signage per service/pump island indicating services offered, and other relevant information.

I. Real estate sale/rental, political campaign signs. No larger than eight (8) square feet in residential zones, and one (1) square foot per each five (5) linear front feet in non-residential zones (with a maximum of sixty-four (64) square feet).

J. Construction signs. One (1) per zoning lot during construction/reconstruction period, unilluminated, removed within two weeks of job completion; no larger than eight (8) square feet in residential zones; and one (1) square foot per each five (5) linear front feet in non-residential zones (with a maximum of sixty-four(64) square feet).

K. Public and semi-public. One (1) sign per street frontage for public, civic or religious institutions or events, not to exceed thirty-two (32) square feet in area; up to three (3) off premises directional signs, unilluminated, per institution or event, with a maximum sign area of six (6) square feet.

L. Historical plaques. One (1) per zoning lot, when erected by recognized historical agencies.

M. Temporary interior signs. Signs painted or displayed on interior windows and interior spaces.

N. Open house signs. Up to three (3) directional signs may be displayed off premises on the days of any advertised open house for sale, each sign shall not exceed four (4) square feet in area.

O. Political campaign signs. Displayed in accordance with Section 3 and Section 7.

P. Balloon Signs. Such signs shall be permitted upon completion of a sign permit application. Such signs shall not be greater than six hundred (600) cubic feet in size. Said sign permit shall not be granted for more than sixty (60) days per calendar year. Balloon signs may be flown off premises at community events as long as the applicant has not exceeded sixty (60) days. Balloon signs must be removed after the event has concluded.

Section 5. PERMITTED SIGNS

Only signs as described herein and as may be permitted otherwise in these regulations will be allowed. No sign described by this Section shall be erected unless a permit for the same has been issued by the Code Enforcement Officer. All signs erected under the requirements of this Section may be illuminated in accordance with Section 6 unless provided otherwise herein. "Districts" refer to zoning districts as depicted on the Official Zoning Map of the City.

A. Residential Districts

1. Permanent, identification signs for subdivision, mobile home parks, and travel trailer campgrounds not exceeding fifteen (15) square feet in area are permitted. One (1) sign may be erected at each major entrance to the subdivision, mobile home park or travel campground; and shall be no closer than ten (10) feet in height above ground level, and shall be parallel to the street frontage.

2. One (1) permanent, identification sign for multi-family residential developments may be erected at each major entrance to the property. Such signs shall not exceed fifteen (15) square feet in area and may be flat-mounted against the wall of an apartment building or freestanding, if freestanding, such signs shall be set back ten (10) feet from property line and shall not exceed six (6) feet in height above ground level, and be parallel to the street frontage.

3. Signs for home occupations shall be limited to one (1) sign not exceeding four (4) square feet in area. Such signs shall be unlighted and mounted flat against the wall of the principal building.

4. One (1) permanent, freestanding sign for non-residential uses permitted as a matter of right, conditionally, or as nonconformities (other than home occupations), may be erected on the premises, provided such signs do not exceed twenty (20) square feet in area. No freestanding sign shall be located

closer than ten (10) feet to any property line nor exceed six (6) feet in height above ground level. Such signs shall be parallel to the street frontage.

5. Non-residential uses permitted as-of-right, conditionally, or as nonconformities (other than home occupations) may have a flat-mounted wall sign. No single sign shall exceed twenty (20) square feet in area.

B. Neighborhood Business, Public Hospital Districts

With the B-1 Neighborhood and P-H Public Hospital Districts as shown on the Zoning Map, only the following types of signs shall be permitted:

1. One (1) freestanding sign shall be permitted for each zoning lot. The area of the sign shall not exceed one (1) square foot for each one (1) foot of lot width, provided no such sign shall exceed fifty (50) square feet. Any such sign shall not exceed fifteen (15) feet in height.

2. Flat-mounted wall signs are permitted for each separate business establishment, provided the total allowable sign are for all such signs shall not exceed one (1) square foot for each linear foot of building wall facing a public street or common drive (such as in a unified shopping center).

3. One (1) identification sign per business may be suspended from or attached to the underside of a canopy or marquee provided such sign does not exceed six (6) square feet in area, and shall maintain a clear distance of at least ten (10) feet between the sidewalk and the bottom of the sign, not over the public right-of-way.

C. General Business

Within the B-2 General Business District as shown on the Zoning Map, only the following types of signs shall be permitted:

1. One (1) permanent, freestanding sign is permitted for each zoning lot. The area of the sign shall not exceed two (2) square feet for each one (1) linear foot of street frontage, or a total of one hundred (100) square feet in area, whichever is less. Any such freestanding sign shall not exceed thirty (30) feet in height.

2. Unified shopping centers and other zoning lots with more than three hundred (300) feet of street frontage may have one (1) additional freestanding sign for each additional three hundred (300) feet of street frontage or portion thereof. The ratio stated in Section 5 C.1 shall apply to such additional signage, as if the additional frontage was a separate lot.

3. Permanent flat-mounted signs are permitted for each separate business establishment, provided the total allowable sign areas for all such signs shall not exceed two (2) square feet for each linear foot of building wall facing a public street or common drive (such as a unified shopping center).

4. One (1) sign projecting from a building façade per street frontage is permitted for each business establishment—in the absence of flat-mounted wall signs. Such sign shall not project more than ten (10) feet from the building façade, and shall not exceed thirty-two (32) square feet in area. Projecting signs, shall not extend above the top of the building parapet or roof ridge; shall maintain a clear distance of at least ten (10) feet above the sidewalk; and shall be totally on/over private property.

5. One (1) identification sign per business establishment may be suspended from or attached to the underside of a canopy or marquee, provided such sign does not exceed six (6) square feet in area and maintains a clear distance of at least ten (10) feet between the sidewalk and the bottom of the sign, not over the public right-of-way.

6. a. One (1) outdoor advertising sign structure is permitted on each zoning lot. The lot must abut a federal or state highway.

   b. To allow one LED billboard, four old regular billboards (if any) within six hundred (600) feet radius of the proposed LED billboard location must be taken down.

   c. Such structure shall meet all building setback and yard requirements of the zoning district, or at least ten (10) feet back from all property lines; and in addition, shall be no closer than seventy-five (75) feet to a residential zone. Five hundred (500) feet shall separate one (1) structure from another (on the same side of a street or around a corner) on a zoning lot with more than three hundred (300) feet of street frontage. One (1) outdoor advertising structure is permitted for each additional five hundred (500) feet of street frontage (or portion thereof). Outdoor advertising signs shall not exceed three hundred (300) square feet in area per facing, with no more than two (2) facings per side, or forty (40) feet in height. All outdoor advertising sign structures must meet state guidelines when facing state and/or federal roadways.

D. <u>Business/Downtown District</u>

Within the B-3 Business/Downtown district as shown on the Zoning Map, only the following types of signs shall be permitted:

1. One (1) permanent, freestanding sign is permitted for each zoning lot. The area of the sign shall not exceed one (1) square foot for each linear foot of

street frontage, or a total of sixty (60) square feet, whichever is less. Any such freestanding sign shall not exceed twenty (20) feet in height.

2. Permanent flat-mounted wall signs are permitted for each separate business establishment, provided the total allowable sign area for all such signs shall not exceed one (1) square foot for each linear foot of building wall facing a public street.

3. One (1) identification sign per business establishment may be suspended from or attached to the underside of a canopy or marquee, provided such sign does not exceed six (6) square feet in area and maintains a clear distance of at least ten (10) feet between the sidewalk and the bottom of the sign, not over the public right-of-way.

E. Industrial Districts

Within the I-1 and I-2 industrial districts as shown on the Zoning Map, only the following types of signs shall be permitted:

1. One (1) permanent, freestanding sign is permitted for each zoning lot. The area of the sign shall not exceed two (2) square feet for each linear foot of lot width, or a total of one hundred (100) square feet, whichever is less. Any such freestanding sign shall not exceed thirty (30) feet in height.

2. One (1) industrial park identification sign is permitted on each park frontage, not to exceed two hundred (200) square feet in area or thirty (30) feet in height.

3. Permanent flat-mounted wall signs are permitted for each separate business, provided the total allowable sign area for all such signs shall not exceed two (2) square feet for each linear foot of building wall facing a public street or common drive (such as in a unified industrial park).

4. One (1) sign projecting from a building façade per street frontage is permitted for each business establishment—in the absence of flat-mounted wall signs. Such sign shall not project more than ten (10) feet from the building and shall not exceed thirty-two (32) square feet in area. Projecting signs shall not extend above the top of the building parapet or roof ridge; shall maintain a clear distance of at least ten (10) feet above the sidewalk; and shall be totally on/over private property.

5. One (1) identification sign per business establishment may be suspended from or attached to the underside of a canopy or marquee, provided such sign does not exceed six (6) square feet in area and maintains a clear distance of at least ten (10) feet between the sidewalk and the bottom of the sign, not over public right-of-way.

6. a. One (1) outdoor advertising sign structure is permitted on each zoning lot. The lot must abut a federal or state highway.

b. To allow one LED billboard, four old regular billboards (if any) within six hundred (600) feet radius of the proposed LED billboard location must be taken down.

c. Such structure shall meet all building setback and yard requirements of the zoning district, or at least ten (10) feet back from all property lines; and in addition, shall be no closer than seventy-five (75) feet to a residential zone. Five hundred (500) feet shall separate one (1) structure from another (on the same side of a street or around a corner) on a zoning lot with more than three hundred (300) feet of street frontage. One (1) outdoor advertising structure is permitted for each additional five hundred (500) feet of street frontage (or portion thereof). Outdoor advertising signs shall not exceed three hundred (300) square feet in area per facing, with no more than two (2) facings per side, or forty (40) feet in height. All outdoor advertising sign structures must meet state guidelines when facing state and/or federal roadways.

Section 6. ILLUMINATION

Where illuminated signs are permitted, they shall conform to the following requirements:

A. All signs illuminated under the provisions of this section shall be construed to meet the requirements of the National, State and local Electric Codes.

B. Signs which contain, include or are lighted by any flashing, intermittent or moving lights are prohibited, except those giving public information such as time, temperature and date. Theater marquees are likewise exempt.

C. Self-illuminated signs shall be limited to those lighted internally with glass or plastic faces bearing the advertisement; provided, however, that exposed neon tubing and exposed incandescent or other bulbs not exceeding fifteen (15) watts each shall be permitted.

D. Flood and display lighting shall be shielded so as to prevent direct rays of light and glare from being cast into a residential area or district and/or vehicles approaching on a public right-of-way from any direction. Such lighting shall also be shielded so as to prevent direct view of the light source from a residence or residential district and/or vehicles approaching on a public right-of-way from any direction.

Section 7. PROHIBITED SIGNS

Unless otherwise permitted, the following signs are prohibited in all use districts:

A. Signs advertising an activity, business, product or service no longer conducted on the premises upon which the sign is located, with the exception of balloon signs which may be used at community events.

B. Signs which, because of their location, nature, color, shape, or message would tend to be confused with, or obstruct the view of, traffic and emergency signals or signs.

C. Signs which display copy of an immoral or indecent nature. The Board of City Commissioners shall resolve any questions pertaining to this provision, applying local community standards.

D. Roof signs, with the exception of balloon signs.

E. Mobile signs.

F. By Nuisance or Hazardous Characteristics.

1. Signs which conflict with traffic control signs. Signs or sign structures which by color, wording or location, resemble or conflict with traffic control signs or devices.

2. Signs which create safety hazards. Signs which obstruct vehicular views of pedestrians or other vehicles or pedestrian views of vehicles, so as to affect the safety of the public.

3. Rotating, moving, scintillating, blinking or flashing illumination signs, except for randomly blinking Tivoli lights, or those permitted by conditional use.

4. Electronic reader boards, of more than thirty-two (32) square feet of area.

G. Signs attached to trees, utility poles, and/or traffic signals.

H. Signs advertising off-premises uses or services, with the exception of balloon signs located at a community event.

Section 8. NONCONFORMING SIGNS

All nonconforming signs shall comply with the following:

A. No nonconforming sign shall have any changes made in the displayed on the sign unless the sign is specifically designed for periodic change of message.

B. No nonconforming sign shall be structurally altered so as to change the shape, size, type or design of the sign, nor shall any nonconforming sign be relocated, unless such move shall create a conforming situation.

C. No nonconforming sign shall be allowed to remain after the activity, business or use to which it relates has been discontinued.

Section 9. INSURANCE

When the City Commission grants a waiver from these regulations for an applicant to place a sign within the public right-of-way, the owner of the premises, and the person in possession thereof, shall obtain and maintain the liability insurance holding the City of Ashland, Kentucky harmless for any liability arising from a sign placed on or above public property. A certificate of such insurance shall be provided to the City by the applicant upon request for waiver. Thereafter, certificate of insurance shall be provided on an annual basis. No permit shall be issued for the erection of any sign until satisfactory proof of insurance has been approved by the Board of Commissioners or its agent.

Section 10. PENALTIES

Any person or entity who violates any of the provisions of this Ordinance shall, upon conviction, be fined not less than ten dollars ($10) nor more than any stated amount provided in KRS 534.040(c). Each day of violation after notification shall constitute a separate offense.

Nothing contained herein shall prevent the City from taking such other lawful action as is necessary to prevent or remedy any violation.

Section 11. DEFINITIONS

Sign. Any structure or device, or part thereof, painted on, or represented on a building or other structure, upon which is displayed or included any letter, figure, design, symbol, trademark, decoration, devices, or representations used as, or which is in the nature of, any announcement, direction, advertisement, or any other attention directing device.

Sign, canopy, marquee, or awning. A sign other than a projecting sign designated on, or suspended under, a canopy, marquee, or awning and identifying the name or address of a building or an establishment contained therein.

Sign, freestanding. A sign erected which is wholly independent of any building for support. All such signs shall be permanently affixed to or constructed upon the lot where they are located.

Sign height. The height of a sign structure as measured from the street grade which a zoning lot fronts upon or from the ground level where a sign support is located (whichever is greater) to the uppermost portion of the sign structure, including any embellishment thereto.

Sign, indirectly illuminated. A sign illuminated by an external light directed primarily toward such sign and so shielded that no direct rays from the light are visible elsewhere than on the lot where said illumination occurs.

Sign, number and surface area. For the purpose of determining the number of signs, a sign shall be considered to be a single display surface or display device containing elements organized, related, and composed to form a unit. Where matter is displayed in a random manner without organized relationship of elements, or where there is reasonable doubt about the relationship of elements, each shall be considered to be a single sign.

The surface area of a sign shall be computed as including the entire area within a regular geometric form or combination of regular geometric forms comprising all of the display area of the sign and including all of the elements of the matter displayed. Architectural trim and structure members not bearing advertising matter shall not be included in computation of surface area.

Freestanding, suspended, and projecting signs shall be computed on the basis of one surface only, provided the opposite surface identical in size and shape, not necessarily in copy or advertisement less than 90 degrees V-shaped or back-to-back.

The allowable sign area computed by applying the square feet/linear feet multiplier shall cover all regulated signs on the building or structure.

Sign, projecting. A sign other than a wall sign which is attached to and projects more than twelve (12) inches from a building face or wall.

Sign, outdoor advertising, billboard. Any sign which directs attention to a business, commodity, service, or entertainment not conducted, sold or offered on the premises where the sign is located.

Sign, mobile. A temporary sign having the capability of being readily transported from one site to another.

Sign, official, public. Any sign, symbol, or device erected and maintained by a public agency for the purpose of informing or guiding the public.

Sign, roof. A sign erected upon, against, or directly above a roof which extends above the ridge; or extends above the parapet of a building.

Sign, wall, flat-mounted. Any sign attached to, or erected against the wall, parapet of a building or structure, or which is an integral part of the building or structure. No such sign shall project more than, one foot from the building, and not above any portion of the roof line. The maximum one foot projection may be within a public right-of-way.

Section 12. REPEAL

All ordinances and parts of ordinances in conflict herewith, to the extent of such conflict only, are hereby repealed.

That Article No. VII of Ordinance No. 101, 1986, is hereby repealed. That Ordinance No. 71, 1988 and Ordinance No. 3, 1995 are hereby repealed.

Section 13.

This ordinance shall be in full force and effect from and after its adoption, readoption and publication, as required by law.

THOMAS E. KELLEY
MAYOR

ATTEST:

DEBORAH MUSSER
CITY CLERK

ADOPTED BY THE BOARD OF COMMISSIONERS:	February 16, 2012
READOPTED BY THE BOARD OF COMMISSIONERS:	March 1, 2012
PUBLISHED:	March 30, 2012

REQUESTED/SPONSORED BY: MIKE MILLER, DIRECTOR OF PLANNING & COMMUNITY DEVELOPMENT