IMPROVEMENT PLANS

IRISHTOWN ROAD

EMMITSBURG, MARYLAND

FREDERICK COUNTY PROJECT # PW260440

SHEET INDEX

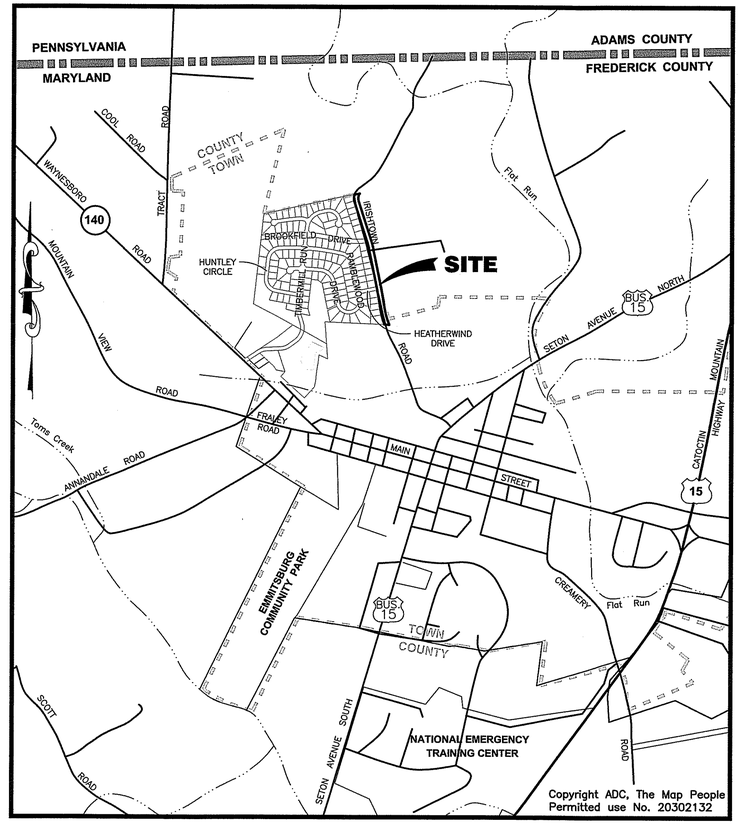

VICINITY MAP

SCALE : 1" = 1000'

TAX MAP 3 PARCEL 91

GENERAL NOTES

1. ALL CONSTRUCTION METHODS AND MATERIALS SHALL BE IN STRICT ACCORDANCE WITH THE CATOCTIN & FREDERICK SOIL CONSERVATION DISTRICT AND THE "GENERAL CONDITIONS AND STANDARD SPECIFICATIONS FOR WATER MAINS, SANITARY SEWERS AND RELATED STRUCTURES", FREDERICK COUNTY, MARYLAND AND THE STATE OF MARYLAND DEPARTMENT OF TRANSPORTATION STATE HIGHWAY ADMINISTRATION.
2. THE CONTRACTOR SHALL VERIFY EXISTING CONDITIONS BEFORE BEGINNING CONSTRUCTION.
3. JOB SITE SAFETY SHALL BE THE SOLE RESPONSIBILITY OF THE CONTRACTOR.
4. EXISTING UTILITIES ARE SHOWN FROM BEST AVAILABLE RECORDS. THE CONTRACTOR SHALL TEST PIT IN THE AREA OF KNOWN UTILITIES TO VERIFY SIZE, ELEVATION, LOCATION AND TYPE PRIOR TO PERFORMING ANY WORK. ANY UTILITY, WHETHER SHOWN OR NOT, THAT IS DAMAGED BY THE CONTRACTOR SHALL BE REPAIRED IMMEDIATELY AT NO EXPENSE TO THE OWNER. SHOULD THE CONTRACTOR DISCOVER DISCREPANCIES BETWEEN THE PLANS AND FIELD CONDITIONS, THE OWNER IS TO BE NOTIFIED IMMEDIATELY. SHOULD THE CONTRACTOR MAKE FIELD CORRECTIONS OR ADJUSTMENTS WITHOUT THE AUTHORIZATION OF THE OWNER, THEN THE CONTRACTOR ASSUMES THE RESPONSIBILITY FOR SAID CORRECTIONS OR ADJUSTMENTS.
5. HORIZONTAL CONTROL IS BASED ON INFORMATION SUPPLIED BY WORLEY SURVEYING. BEARINGS AND DISTANCES ARE IN AGREEMENT WITH SURVEY PREPARED BY FOX AND ASSOCIATES, INC. VERTICAL CONTROL IS BASED UPON SANITARY SEWER DATUM AT MANHOLE #83 421.20, SUPPLIED BY TOWN OF EMMITSBURG PUBLIC WORKS DEPARTMENT. EXISTING TOPOGRAPHY IS BASED UPON FIELD RUN TOPOGRAPHIC SURVEY BY FOX & ASSOCIATES, INC. DECEMBER 2017.
6. CONTRACTOR SHALL NOTIFY MISS UTILITY (1-800-257-7777), FREDERICK COUNTY DIVISION OF ENVIRONMENTAL COMPLIANCE SECTION (ECS) (301-600-3507) AND TOWN OF EMMITSBURG (301-600-6300) 5 DAYS PRIOR TO THE START OF CONSTRUCTION.
7. FOX & ASSOCIATES, INC. HAS PERFORMED NO SUBSURFACE INVESTIGATION TO DETERMINE LOCATIONS OF ROCK, DIFFERENT SOIL TYPES, WATER TABLE, UTILITIES, ETC. VARIOUS SUBSURFACE INVESTIGATIONS HAVE BEEN PERFORMED BY SPECIALIZED ENGINEERING. THEY WERE INDEPENDENTLY CONTRACTED BY THE OWNER/DEVELOPER. GEOTECH REPORT BY SPECIALIZED ENGINEER TITLED "SUBSURFACE EXPLORATION AND GEOTECHNICAL EVALUATION, THREE SWM PONDS" DATED APRIL 25, 2007. ALL GEOTECHNICAL ENGINEERING REPORTS HAVE BEEN INCLUDED IN RELATIVE COMPUTATION PACKAGES.
8. ALL STORM DRAIN CONSTRUCTION SHALL BE IN ACCORDANCE WITH THE FREDERICK COUNTY DEPARTMENT OF PUBLIC WORKS AND STATE HIGHWAY ADMINISTRATION'S STANDARDS, SPECIFICATIONS, AND DETAILS AND THE FREDERICK COUNTY PLUMBING CODE.
9. ALL WATER AND SEWER CONSTRUCTION SHALL BE IN ACCORDANCE WITH THE FREDERICK COUNTY "GENERAL CONDITIONS AND STANDARD SPECIFICATIONS" FOR WATER MAINS, SANITARY SEWER AND RELATED STRUCTURES, AND THE "STANDARD DETAILS" FOR WATER MAINS, SANITARY SEWER AND RELATED STRUCTURES.
10. THE CONTRACTOR MUST NOT OPERATE VALVES, TAP OR OTHERWISE PENETRATE EXISTING WATER OR SEWER MAINS WITHOUT APPROVAL OF THE TOWN OF EMMITSBURG. WATER SERVICE SHUT-OFFS/TURN-ONS AND WATER METER REMOVAL AND REPLACEMENTS MUST BE COORDINATED WITH THE TOWN OF EMMITSBURG. 24 HOURS PRIOR TO WATER SHUT DOWN, NOTIFY RESIDENTS OF THE LENGTH OF TIME OF THE SHUT DOWN.
11. CONTACT FOX & ASSOCIATES, INC. PRIOR TO MAKING PLAN MODIFICATIONS. ALL FIELD MODIFICATIONS ARE TO BE APPROVED BY ENGINEER AND INSPECTOR.
12. ALL UTILITIES SHALL HAVE MINIMUM SEPARATION OF 5 FEET HORIZONTAL AND 1 FOOT VERTICAL. MINIMUM HORIZONTAL SEPARATION BETWEEN SEWER AND ALL UTILITIES SHALL BE 10 FEET.
13. A SIX FOOT (6') DRAINAGE AND UTILITY EASEMENT IS RESERVED ALONG ALL LOT LINES.
14. DEVELOPER OR HOME BUILDER SHALL SLEEVE ALL WATER SERVICES UNDER DRIVEWAYS WITH 1 1/2 INCH DIAMETER SCHEDULE 40 PVC. PIPE.
15. CONTRACTOR IS RESPONSIBLE TO AVOID SPILLAGE OF RAW SEWAGE. CONTRACTOR SHALL PROVIDE ALL SEWER PLUGGING, CONTAINMENT AND PUMPING EQUIPMENT NECESSARY TO AVOID SPILLAGE. CONTRACTOR SHALL NOT OPERATE VALVES ON EXISTING WATER MAINS.
16. EXCAVATION WITHIN A COUNTY ROAD RIGHT-OF-WAY WILL NOT BE ALLOWED WITHOUT OBTAINING A PERMIT FROM THE FREDERICK COUNTY DIVISION OF PUBLIC WORKS FOR THE INSTALLATION OF UTILITIES, STORM DRAINS, ETC.
17. SPILLAGE OF RAW SEWAGE IS PROHIBITED.
18. STORMWATER MANAGEMENT IS PROVIDED BY THE EXISTING REGIONAL FACILITY. REFER TO PLANS BY FOX & ASSOCIATES, INC. TITLED "STORMWATER MANAGEMENT PLANS FOR BROOKFIELD SUBDIVISION" APPROVED BY S.C.D. 6/25/01 AND BY FREDERICK COUNTY ON 7/2/01 #IP 162.
19. ALL SANITARY SEWER LINES SHALL BE POLYVINYL CHLORIDE (PVC) SDR-35. SEWER PIPE DEEPER THAN 14-FEET TO BE PVC SDR-26.
20. ALL 2", 3" & 4" WATERLINES TO BE HDPE. 6" WATERLINES TO BE D.I. CL. 54. 8" & 10" WATERLINES TO BE D.I. CL. 52. ALL WHC TO BE 1" FREDERICK COUNTY STANDARD DETAIL #110.1. ALL RAW WATER VALVE COVERS SHALL READ "RAW WATER".
21. THE CONTRACTOR SHALL MAINTAIN A MINIMUM OF 2' OF COVER ON ALL STORM DRAIN PIPES SUBJECTED TO CONSTRUCTION TRAFFIC.
22. ANY NECESSARY ADJUSTMENTS TO EXISTING MANHOLES, VALVE BOXES, ETC., ARE TO BE DONE SO BY THE CONTRACTOR. THE CONTRACTOR IS RESPONSIBLE FOR REMOVING AND REPLACING ANY EXISTING FENCES, DRIVEWAYS, SIGNS, DRAINAGE PIPES, MAILBOXES, SHRUBS, TREES, ETC. DAMAGED OR REMOVED DURING CONSTRUCTION. ALL DISTURBED AREAS SHALL BE RETURNED TO THEIR ORIGINAL CONDITION OR BETTER.
23. THE CONTRACTOR SHALL BE RESPONSIBLE FOR KEEPING SILT AND DEBRIS OUT OF THE SEWER AND STORM DRAINAGE SYSTEM FOR THE DURATION OF THE CONTRACT.
24. THE CONTRACTOR SHALL MAINTAIN ACCESS TO ALL PROPERTY OWNERS AT ALL TIMES. THE CONTRACTOR, WITH OWNER APPROVAL, WILL COORDINATE WITH PROPERTY OWNERS IF ACCESS MUST BE INTERRUPTED FOR SHORT TIME PERIODS.
25. ALL WETLAND DELINEATION AND PERMITTING FOR THE BROOKFIELD SUBDIVISION HAS BEEN PERFORMED BY CONSULTANTS OTHER THAN FOX & ASSOCIATES, INC. UNDER DIRECT CONTRACT WITH THE DEVELOPER. EACH CONTRACTOR SHALL BE RESPONSIBLE FOR ENSURING THAT ALL NECESSARY WETLAND PERMITS HAVE BEEN OBTAINED BEFORE BEGINNING CONSTRUCTION. PLEASE SEE PLANS BY FOX & ASSOCIATES, INC. - RE-APPROVED BY THE FREDERICK COUNTY SCD ON 5/3/04 & FREDERICK COUNTY DPW ON 7/3/01. REFERENCE TO FOX & ASSOCIATES INC. DWG #D-01-A. NO WETLANDS EXIST IN THIS SECTION.
26. THE 100-YR FLOODPLAIN WITHIN THE PROJECT LIMITS OF THIS SECTION TAKEN FROM FLOOD INSURANCE RATE MAP PANEL NO. 24021C0055D, SEPTEMBER 19, 2007.
27. FIRE HYDRANT MARKERS SHALL BE INSTALLED IN ACCORDANCE WITH D.O.L.S. REQUIREMENTS. ALL PRIVATE DRIVE AISLES SHALL BE MARKED AS FIRE LANES WITH NO PARKING. FIRE LANES SHALL BE PAINTED TRAFFIC YELLOW AND APPROVED SIGNS SHALL BE POSTED EVERY 75 FEET MAXIMUM.
28. CONTRACTOR SHALL PROVIDE ALL REQUIRED ROADWAY SIGNS, BARRICADES, STRIPING AND PAVEMENT MARKINGS IN ACCORDANCE WITH THE MANUAL ON UNIFORM TRAFFIC CONTROL DEVICES (MUTCD).
29. ALL MATERIALS EXCAVATED WHICH IS UNSUITABLE FOR BACKFILL SHALL BE DISPOSED OF AT AN APPROVED LOCATION.
30. PLACEMENT OF ANY CONCRETE WORK SUCH AS CURB/GUTTER/SIDEWALKS/DRIVEWAY APRONS/ETC. SHALL BE COMMENCED ONLY AFTER THE RELOCATIONS AND/OR INSTALLATION OF ALL UTILITIES AND UTILITY CROSSINGS INCLUDING GAS LINES/ELECTRICAL LINES/STREET LIGHTING CONDUITS/CONDUITS/TELEVISION CABLE/WATER AND SEWER LINES/ETC. ARE IN PLACE.
31. PAVING, CURB AND GUTTER AND FINE GRADING CONTRACTOR(S) SHALL BE RESPONSIBLE FOR MAINTAINING POSITIVE DRAINAGE WITHIN ALL PROPOSED WORK AREAS AT ALL TIMES.
32. ANY BLASTING REQUIRED FOR SITE CONSTRUCTION SHALL REQUIRE THE CONTRACTOR TO OBTAIN PROPER PERMITS AND PERFORM BLASTING OPERATIONS IN ACCORDANCE WITH ALL LOCAL, STATE AND/OR FEDERAL REGULATIONS.
33. ALL LOTS SHALL HAVE A MINIMUM OF 4 INCHES OF TOPSOIL, SEEDED AND MULCHED.
34. THE PROPERTY ADDRESSES AND STREET SIGNS SHALL BE FABRICATED AND POSTED IN ACCORDANCE WITH THE FREDERICK COUNTY PREMISE IDENTIFICATION ORDINANCE #05-01-362.
35. ALL SIGNING, MARKING, LIGHTING, GUARDRAIL/END TREATMENTS, AMONG OTHER DESIGN ELEMENTS, ARE DESIGNED BASED ON CONDITIONS REPRESENTED ON THE PLANS ARE SUBJECT TO CHANGE (BASED ON FIELD CONDITIONS), AS DIRECTED BY THE COUNTY INSPECTOR. ANY CHANGE DEEMED SIGNIFICANT BY THE INSPECTOR SHALL, IF NECESSARY, DIRECT THE DESIGN ENGINEER TO RESUBMIT THE PLANS TO DPDR AS A REVISION FOR RE-APPROVAL.
36. EXCAVATION WITHIN A STATE ROAD RIGHT-OF-WAY SHALL BE PERFORMED IN ACCORDANCE WITH THE PROVISIONS IN THE PERMIT ISSUED BY THE MARYLAND STATE HIGHWAY ADMINISTRATION (SHA). CONTRACTOR TO BE LISTED AS "TRAFFIC CONTROL MANAGER" AND ALL TRAFFIC CONTROL DEVICES SHALL BE IN ACCORDANCE WITH THE LATEST S.H.A. STANDARDS.
37. IN ACCORDANCE WITH CODE OF MARYLAND (COMAR) 26.04.01.33, MATERIALS USED IN THE MANUFACTURE OF PUBLIC WATER SUPPLY COMPONENTS, APPURTENANCES, PIPE, STORAGE TANK, VALVE, FIXTURE, OR OTHER MATERIALS WHICH COME IN CONTACT WITH WATER INTENDED FOR USE IN PUBLIC WATER SUPPLY MUST MEET THE APPLICABLE AMERICAN NATIONAL STANDARDS INSTITUTE (ANSI)/NATIONAL SANITATION FOUNDATION (NSF 61 NAD NSF 372) STANDARDS FOR DIRECT OR INDIRECT DRINKING WATER ADDITIVES. THIS APPLIES TO ANY PRODUCT WHICH COME IN CONTACT WITH WATER INTENDED FOR USE IN PUBLIC WATER SUPPLY.
38. SIGNAGE MARKING AND SPECIFICATIONS SHALL COMPLY WITH APPENDIX B OF "COUNTY GUIDANCE FOR TRAFFIC CONTROL DEVICES, STREET LIGHTS AND STREET TREES FOR NEW DEVELOPMENT".
39. ALL SSC's MUST BE BETWEEN 2 - 5%..
40. EMMITSBURG IS UNDERLAIN BY A HARD RED SHALE WHICH IN MANY AREAS IS CLOSE ENOUGH TO THE SURFACE TO INTERFERE WITH UTILITY INSTALLATION. DUE TO THE FREQUENCY OF ROCK EXCAVATION REQUIRING UNDERCUT AND BACKFILL, ALL TRENCHES FOR PIPE INSTALLATION SHALL BE UNDERCUT SIX INCHES BELOW SUBGRADE AND BACKFILLED WITH CRUSHER RUN OR STONE DUST. USE CRUSHER RUN OR STONE DUST AS TRENCH BACKFILL TO A POINT ONE FOOT ABOVE THE TOP OF THE PIPE. FROM THIS POINT ON, BACKFILL AS SPECIFIED IN THE FREDERICK COUNTY "GENERAL CONDITIONS AND STANDARD SPECIFICATIONS" AND "STANDARD DETAILS."
41. THE TOWN OF EMMITSBURG REQUIRES THE USE OF AN "A-LOC" TYPE GASKET TO SEAL A SEWER PIPE TO A MANHOLE.
42. STREET LIGHTS SHALL BE UPDATED TO AN LED BULB EQUAL TO THE APPROVED 150W HPS BULB PER TOWN OF EMMITSBURG CODE.

DISTURBED AREA QUANTITY

THE TOTAL AREA TO BE DISTURBED SHOWN ON THESE PLANS HAS BEEN DETERMINED TO BE APPROXIMATELY 144,107 SQ. FT. AND THE TOTAL AMOUNT OF EXCAVATION AND FILL AS SHOWN ON THESE PLANS HAS BEEN COMPUTED TO BE APPROXIMATELY - CU. YDS. * OF EXCAVATION AND APPROXIMATELY - CU. YDS. * OF FILL.

JOSEPH H. CECI, P.E. REG. No. 30709 — DATE 3/22/21

* THESE QUANTITIES ARE APPROXIMATE AND SHALL NOT BE USED BY THE CONTRACTOR FOR BIDDING PURPOSES.

ENGINEER DESIGN CERTIFICATION

I HEREBY CERTIFY THIS PLAN FOR SOIL EROSION AND SEDIMENT CONTROL HAS BEEN DESIGNED IN ACCORDANCE WITH LOCAL ORDINANCES, COMAR 26.17.01, 26.17.02 AND THE 2011 MARYLAND STANDARDS AND SPECIFICATIONS FOR SOIL EROSION AND SEDIMENT CONTROL.

JOSEPH H. CECI — REG. NO. 30709 — DATE 3/22/21

PROFESSIONAL CERTIFICATION

STATE OF MARYLAND — JOSEPH H. CECI — No. 30709 — PROFESSIONAL ENGINEER

3/22/21

I HEREBY CERTIFY THAT THESE DOCUMENTS WERE PREPARED OR APPROVED BY ME, AND THAT I AM A DULY LICENSED PROFESSIONAL ENGINEER UNDER THE LAWS OF THE STATE OF MARYLAND.

LICENSE No.: 30709 EXP. DATE: 7/29/22

APPROVED BY:
TOWN OF EMMITSBURG

TOWN MAYOR — DATE

PLANNING COMMISSION CHAIRMAN — DATE

DATE	REVISION
11 / 2020	REVISED PER TOWN OF EMMITSBURG COMMENTS

FREDERICK SOIL CONSERVATION DISTRICT SOIL EROSION AND SEDIMENT CONTROL PLAN APPROVAL

By: _____

Date: _____

SCD APPROVAL FOR SEDIMENT AND EROSION CONTROL IS CONTINGENT UPON ISSUANCE OF ALL APPLICABLE REGULATORY PERMITS.

(PLAN IS VALID FOR TWO YEARS FROM DATE OF APPROVAL)

OWNERS / DEVELOPERS CERTIFICATION

I/WE HEREBY CERTIFY THAT ANY CLEARING, GRADING, CONSTRUCTION AND/OR DEVELOPMENT WILL BE DONE PURSUANT TO THIS PLAN AND THAT ANY RESPONSIBLE PERSONNEL INVOLVED IN THE CONSTRUCTION PROJECT WILL HAVE A CERTIFICATE OF ATTENDANCE AT A DEPARTMENT OF THE ENVIRONMENT APPROVED TRAINING PROGRAM FOR THE CONTROL OF SEDIMENT AND EROSION BEFORE BEGINNING THE PROJECT.

OWNER / DEVELOPER — DATE

CDD - Dev. Review

File :

A / P # :

Due Date :

PROJECT NO. 18 - 50891
DRAWING NO. D - 3501
DATE: AUGUST 2020
DRAWN BY: RND
CHECKED BY: JEM

SHEET 1 OF 15

PREPARED BY

FOX & ASSOCIATES, INC.
ENGINEERS • SURVEYORS • PLANNERS

981 MT. AETNA ROAD
HAGERSTOWN, MD. 21740
PHONE: (301)733-8503
or (301)416-7250
FAX: (301)733-1853

82 WORMANS MILL COURT
SUITE 'G'
FREDERICK, MD. 21701
PHONE: (301)695-0880
FAX: (301)293-6009

WWW.FOXASSOCIATESINC.COM Email: FOXFREDERICK@FOXASSOCIATESINC.COM

OWNER:
RJD DEVELOPMENT CORPORATION
P.O. BOX 228
CLARKSVILLE, MD 21029
C/O RICHARD DEMMITT
PHONE: 410-365-0414

H:\CARLSON PROJECTS\18\50891 HIGHLAND DEVELOPMENT CORP\WD-01.DWG, 3/22/2021 11:23:11 AM, RDICKINSON, 1:1

LEGEND

- EXISTING 2' CONTOUR
- EXISTING 10' CONTOUR
- EXISTING WATER LINE
- EXISTING SEWER LINE
- EXISTING STORM DRAIN
- SOIL LINE
- EXISTING UTILITY POLE
- EXISTING SIGN
- EXISTING FENCE
- EXISTING TREE CANOPY
- EXISTING TREE CANOPY

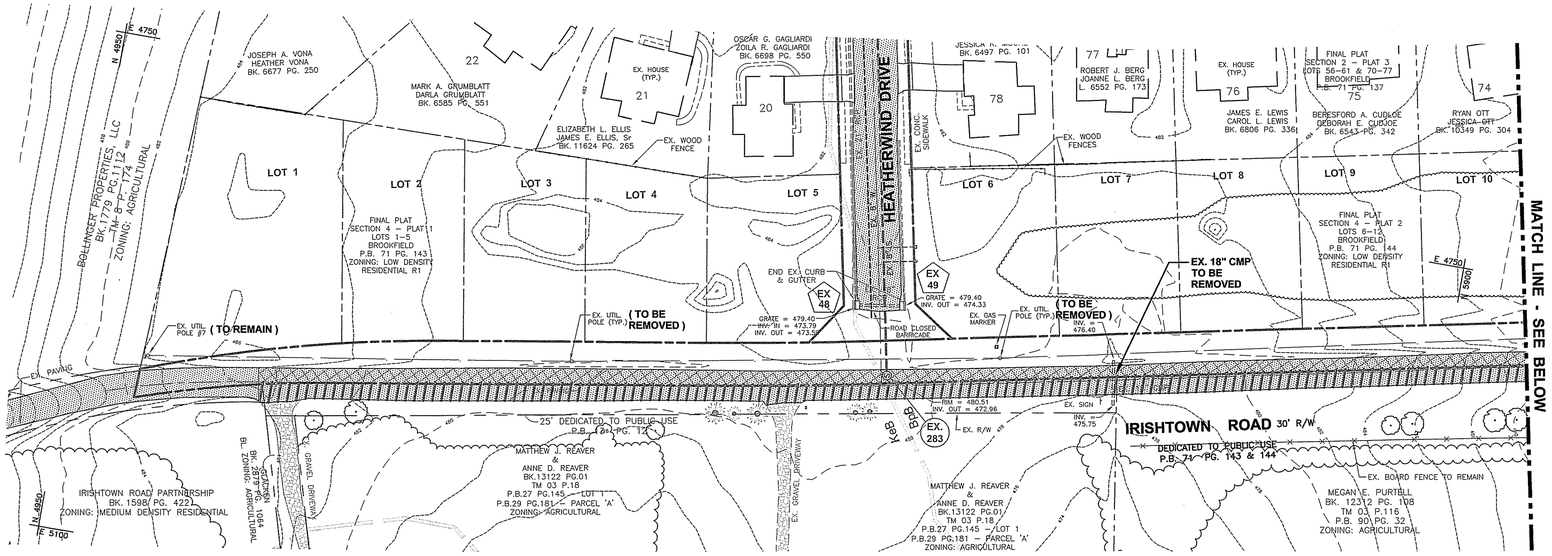

LEGEND

- EXISTING PAVEMENT TO REMAIN
- EXISTING GRAVEL
- EXISTING PAVEMENT TO BE REMOVED
- LIMIT OF MILL AND OVERLAY

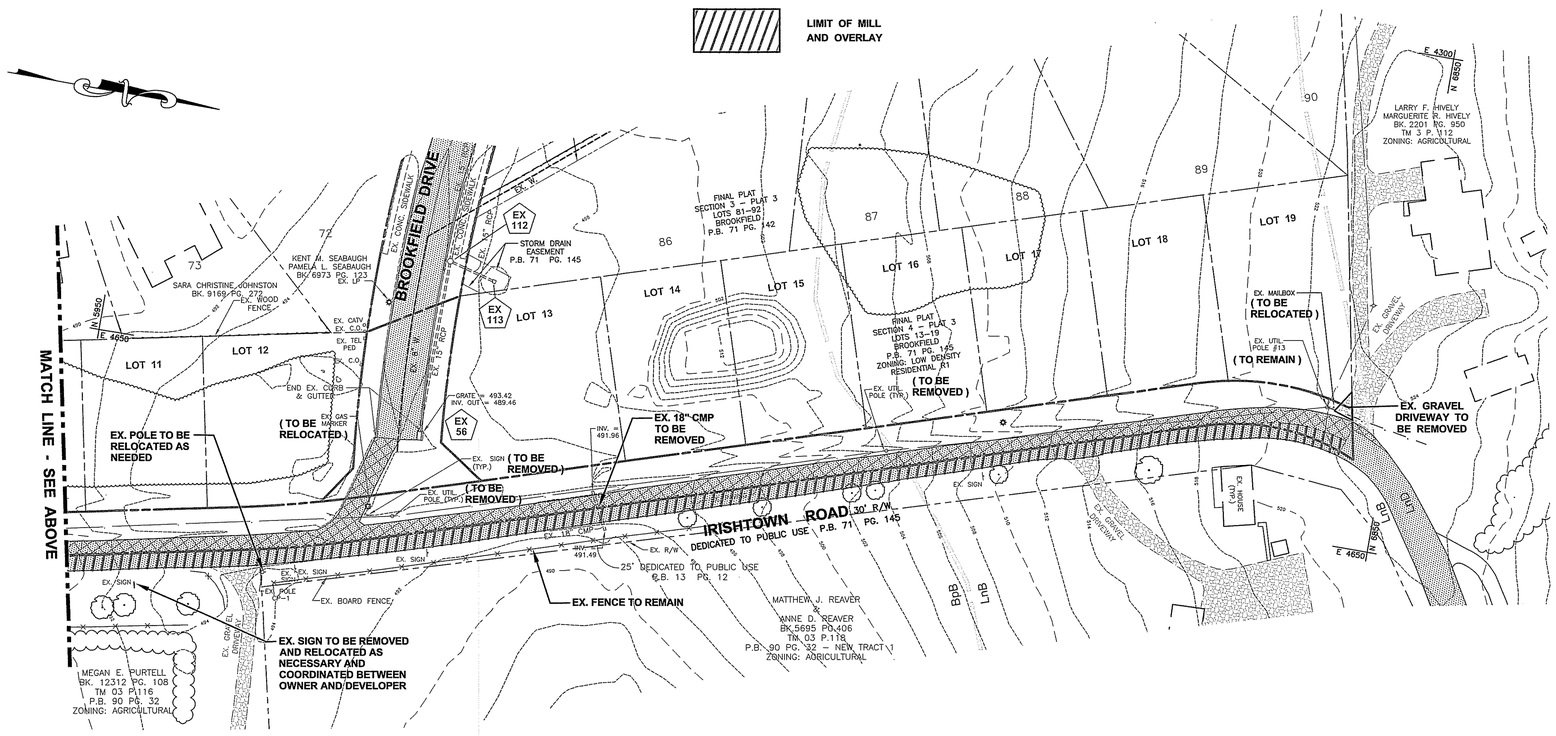

FOX & ASSOCIATES INC. Est. 1966

FOX & ASSOCIATES, INC.
ENGINEERS•SURVEYORS•PLANNERS
981 MT. AETNA ROAD
HAGERSTOWN, MD. 21740
PHONE: (301)733-8503
or (301)416-7250
FAX: (301)733-1853
82 WORMANS MILL COURT
SUITE "G"
FREDERICK, MD. 21701
PHONE: (301)695-0860
FAX: (301)293-6009
WWW.FOXASSOCIATESINC.COM Email: FOXFREDERICK@FOXASSOCIATESINC.COM

DATE	REVISION	DRAWN BY
11/2020	REVISED PER TOWN OF EMMITSBURG COMMENTS	

EXISTING CONDITIONS AND DEMO PLAN
IRISHTOWN ROAD

SITUATED ON THE WEST SIDE OF IRISHTOWN ROAD
TOWN OF EMMITSBURG, ELECTION DISTRICT No. 5
FREDERICK COUNTY, MARYLAND

SCALE: 1" = 50'

PROFESSIONAL CERTIFICATION

STATE OF MARYLAND JOSEPH H. GREGG III No. 30709 PROFESSIONAL ENGINEER

3/22/21

I HEREBY CERTIFY THAT THESE DOCUMENTS WERE PREPARED OR APPROVED BY ME, AND THAT I AM A DULY LICENSED PROFESSIONAL ENGINEER UNDER THE LAWS OF THE STATE OF MARYLAND.

LICENSE No.: 30709 EXP. DATE: 7/23/22

PROJECT NO.	18-50891
DRAWING NO.	D - 3501
DATE:	AUGUST 2020
DRAWN BY:	JWE
CHECKED BY:	JEM

SHEET 2 OF 15

CURVE TABLE						
CURVE	RADIUS	LENGTH	DELTA	TANGENT	BEARING	CHORD
C1	1001.00'	311.91	17°51'13"	157.23'	N18°28'08"W	310.68'
C2	2765.91'	99.95'	2°04'14"	49.98'	N10°34'39"W	99.95'

LEGEND

- EXISTING UTILITY POLE
- EXISTING SIGN
- PROPOSED LIGHT POLE

NOTE :

A TEMPORARY PAVING TRANSITION IS REQUIRED UP TO STA. 50+87.52 UNTIL SUCH TIME AS IRISHTOWN ROAD IS RECONSTRUCTED SOUTH OF STA. 52+00.

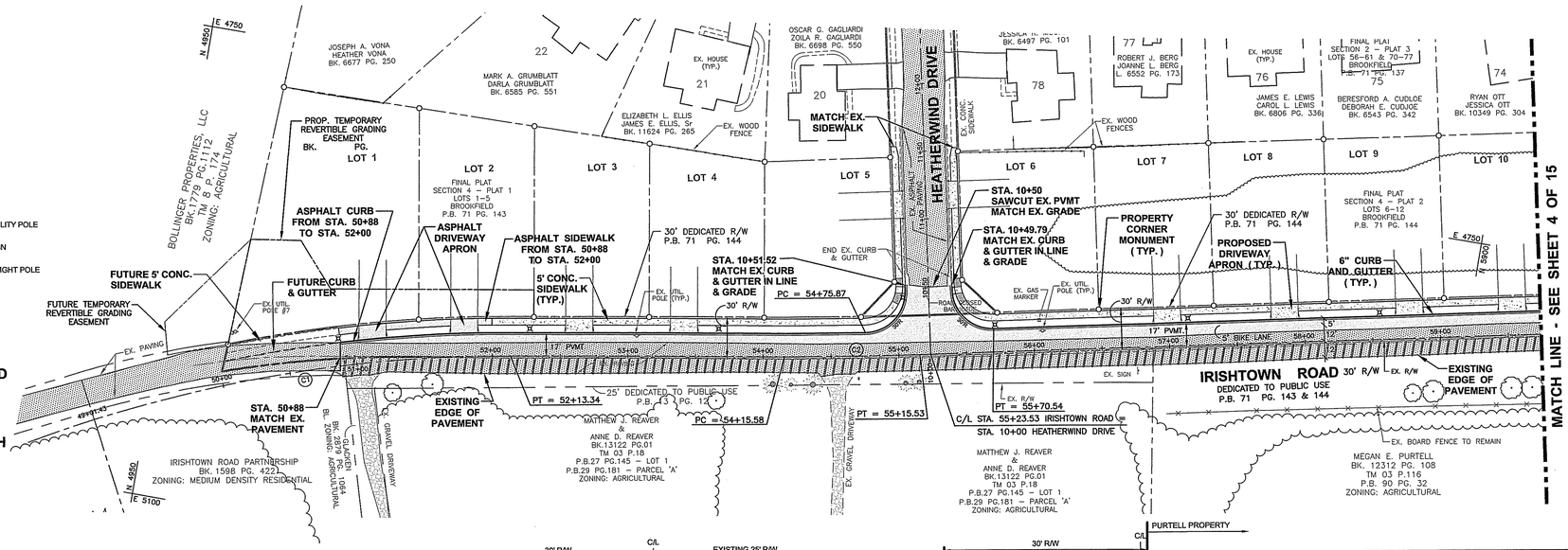

LEGEND

- PROPOSED PAVEMENT
- MILL AND OVERLAY PAVEMENT OR FULL PAVEMENT RECONSTRUCTION PER FIELD CONDITIONS
- EXISTING PAVEMENT
- EXISTING GRAVEL DRIVEWAY
- PROPOSED GRAVEL APRON

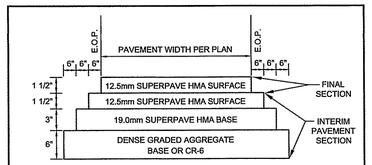

NOTES:
1. THE FINAL 1 1/2" SURFACE COURSE TO BE PLACED AFTER MAJORITY OF SITE CONSTRUCTION IS COMPLETED.
2. ALL SUPERPAVE HMA TO BE PG 64-22

PAVEMENT SECTION *
(ALL PUBLIC STREETS)

NOT TO SCALE

SCALES
PLAN: 1" = 50'
PROFILE: HORIZ. – 1" = 50'
VERT. – 1" = 5'

POSTED SPEED LIMIT 25 MPH

DESIGN SPEED 35 MPH

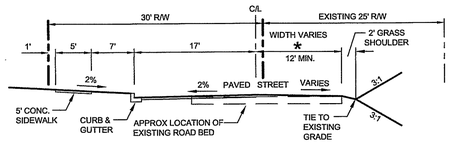

TYPICAL SECTION - IRISHTOWN ROAD
REAVER PROPERTY STA 51+15 to STA 56+88 & STA 61+09 to STA 65+50
30' R / W - LOCAL PUBLIC ROAD
*** MILL AND OVERLAY EXISTING PAVEMENT**

NOT TO SCALE

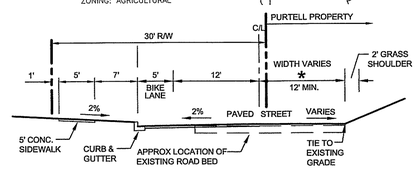

TYPICAL SECTION - IRISHTOWN ROAD
PURTELL PROPERTY STA 56+88 to STA 61+09
30' R / W - LOCAL PUBLIC ROAD
*** MILL AND OVERLAY EXISTING PAVEMENT**

NOT TO SCALE

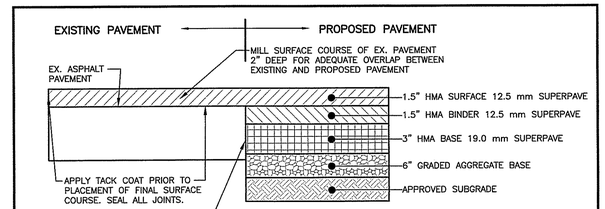

TYPICAL MILL & OVERLAY AND WIDENING PAVEMENT DETAIL

NOT TO SCALE

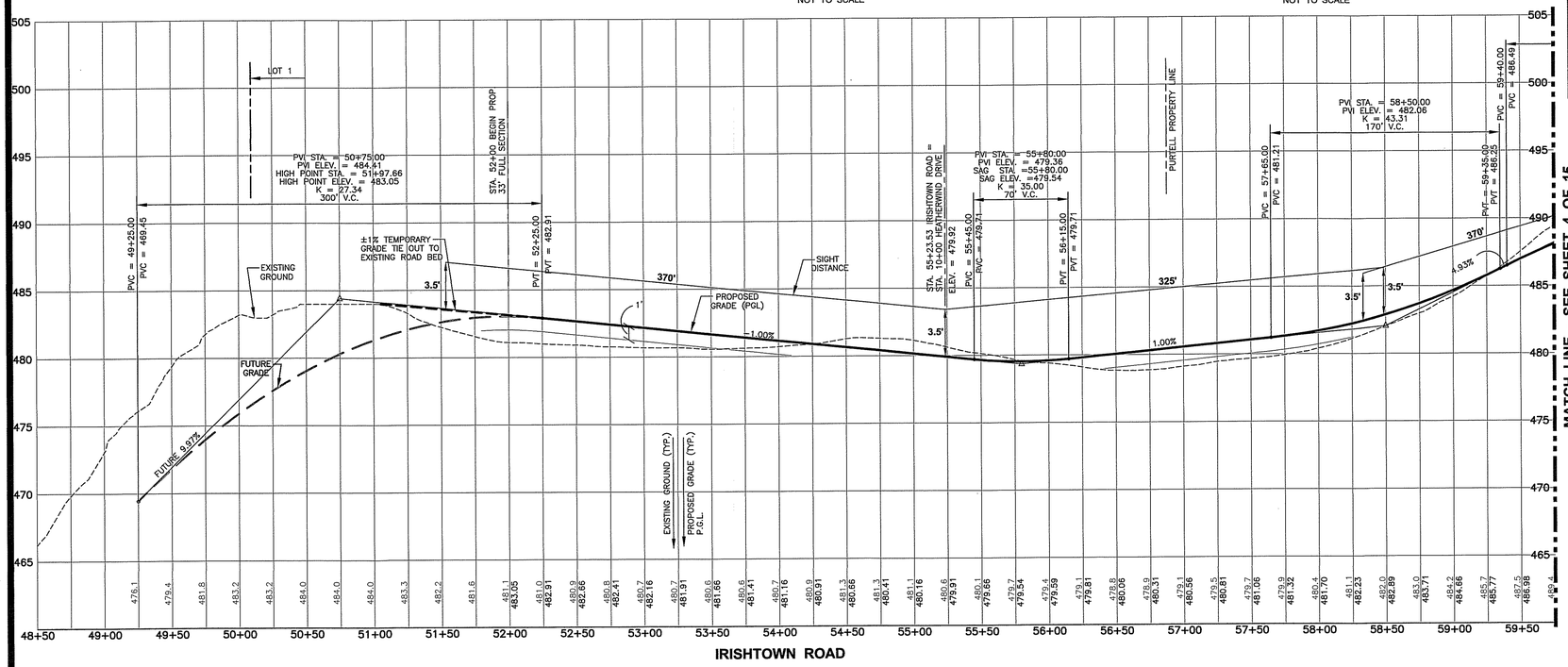

STRUCTURAL FILL NOTE :
STRUCTURAL FILL SHALL BE COMPACTED TO 97% MAX. DRY DENSITY FOR TOP 1' OF MATERIAL AND 95% MAX. DRY DENSITY BELOW 1' PER AASHTO T-180 OR AS RECOMMENDED BY PROJECT GEOTECHNICAL ENGINEER.

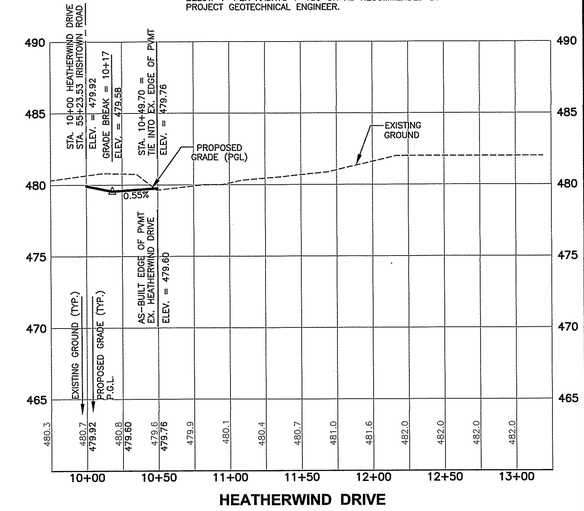

FOX & ASSOCIATES INC.
Est. 1966
FOX & ASSOCIATES, INC.
ENGINEERS•SURVEYORS•PLANNERS
981 MT. AETNA ROAD
HAGERSTOWN, MD. 21740
PHONE: (301)733-8503
or (301)416-7260
FAX: (301)733-1653
82 WORMANS MILL COURT
SUITE 'G'
FREDERICK, MD. 21701
PHONE: (301)695-5080
FAX: (301)293-6009
WWW.FOXASSOCIATESINC.COM Email: FOXFREDERICK@FOXASSOCIATESINC.COM

DATE	REVISION	DRAWN BY
11/2020	REVISED PER TOWN OF EMMITSBURG COMMENTS	

PAVING PLAN & PROFILE
IRISHTOWN ROAD
STA. 50+00 TO STA. 59+75

SITUATED ON THE WEST SIDE OF IRISHTOWN ROAD
TOWN OF EMMITSBURG, ELECTION DISTRICT No. 5
FREDERICK COUNTY, MARYLAND

SCALE: AS SHOWN

PROFESSIONAL CERTIFICATION

STATE OF MARYLAND — JOSEPH M. CECOT — No. 30709 — PROFESSIONAL ENGINEER

3/22/21

I HEREBY CERTIFY THAT THESE DOCUMENTS WERE PREPARED OR APPROVED BY ME, AND THAT I AM A DULY LICENSED PROFESSIONAL ENGINEER UNDER THE LAWS OF THE STATE OF MARYLAND.

LICENSE No.: 30709 EXP. DATE: 7/23/22

PROJECT NO. 18-50891
DRAWING NO. D - 3501
DATE: AUGUST 2020
DRAWN BY: JWE
CHECKED BY: JEM

SHEET 3 OF 15

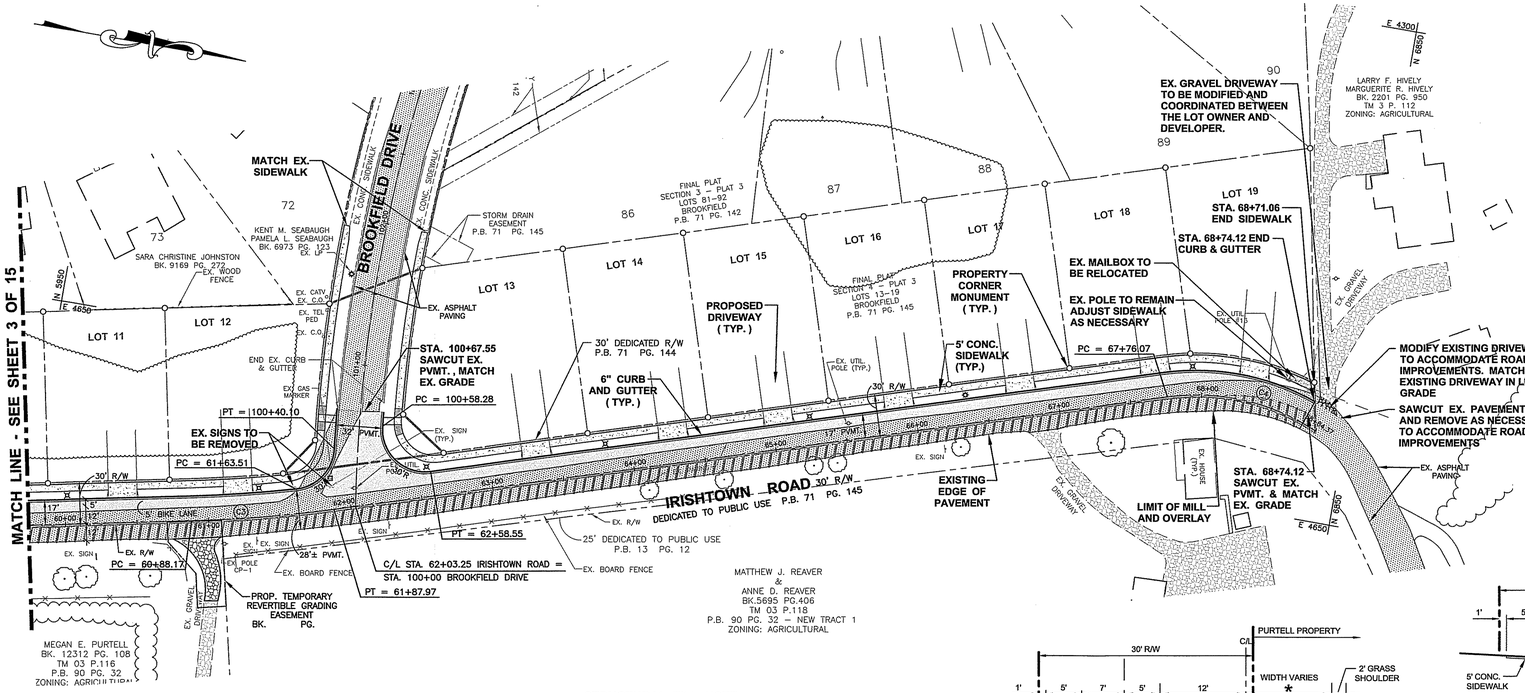

LEGEND

- EXISTING UTILITY POLE
- EXISTING SIGN
- PROPOSED LIGHT POLE

SCALES

PLAN: 1" = 50'

PROFILE: HORIZ. – 1" = 50'
VERT. – 1" = 5'

POSTED SPEED LIMIT 25 MPH

DESIGN SPEED 35 MPH

STRUCTURAL FILL NOTE :

STRUCTURAL FILL SHALL BE COMPACTED TO 97% MAX. DRY DENSITY FOR TOP 1' OF MATERIAL AND 95% MAX. DRY DENSITY BELOW 1' PER AASHTO T-180 OR AS RECOMMENDED BY PROJECT GEOTECHNICAL ENGINEER.

CURVE TABLE						
CURVE	RADIUS	LENGTH	DELTA	TANGENT	BEARING	CHORD
C3	940.23'	99.60'	6°04'53"	49.95'	S14°39'13"E	99.75'
C4	151.00'	108.30'	41°05'30"	56.59'	N02°51'06"E	105.99'

LEGEND

- PROPOSED PAVEMENT
- MILL AND OVERLAY PAVEMENT OR FULL PAVEMENT RECONSTRUCTION PER FIELD CONDITIONS
- EXISTING PAVEMENT
- EXISTING GRAVEL DRIVEWAY
- PROPOSED GRAVEL APRON

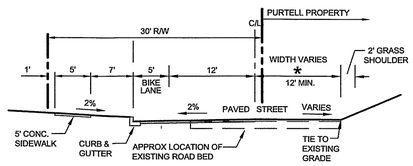

TYPICAL SECTION - IRISHTOWN ROAD
PURTELL PROPERTY STA 56+88 to STA 61+09
30' R / W - LOCAL PUBLIC ROAD
*** MILL AND OVERLAY EXISTING PAVEMENT**

NOT TO SCALE

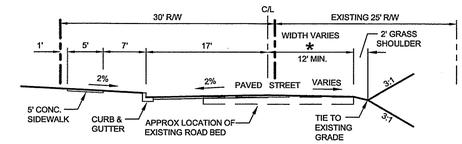

TYPICAL SECTION - IRISHTOWN ROAD
REAVER PROPERTY STA 51+15 to STA 56+88 & STA 61+09 to STA 65+50
30' R / W - LOCAL PUBLIC ROAD
*** MILL AND OVERLAY EXISTING PAVEMENT**

NOT TO SCALE

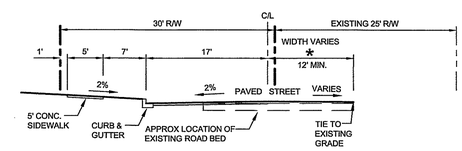

TYPICAL SECTION - IRISHTOWN ROAD
REAVER PROPERTY STA 65+50 to STA 68+74.12
*** MILL AND OVERLAY EXISTING PAVEMENT**

NOT TO SCALE

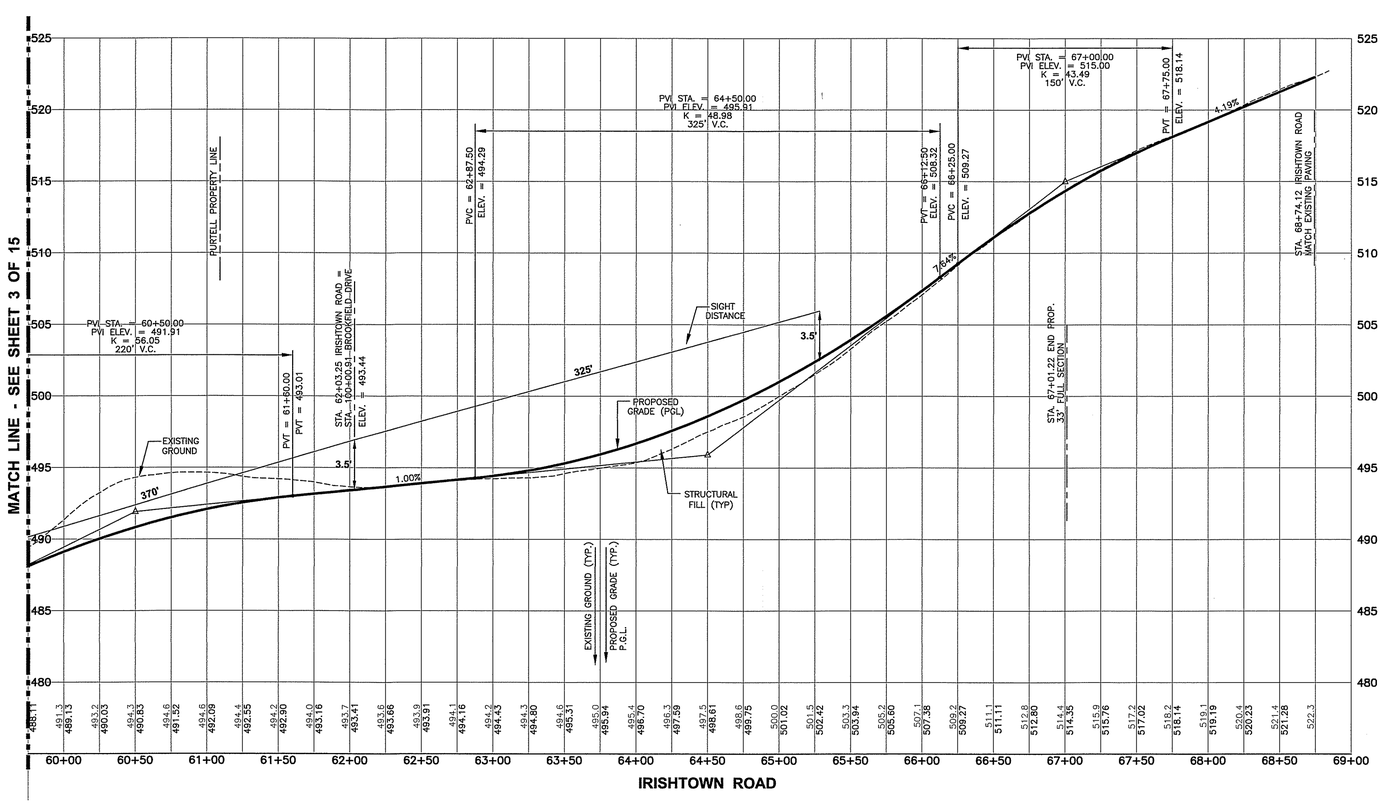

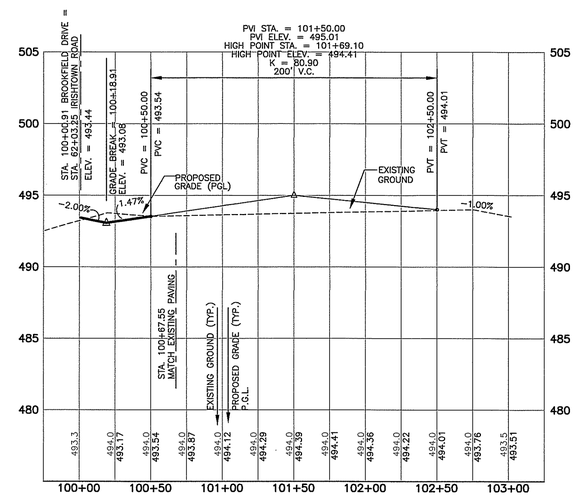

FOX & ASSOCIATES INC.
Est. 1966

FOX & ASSOCIATES, INC.
ENGINEERS • SURVEYORS • PLANNERS
981 MT. AETNA ROAD
HAGERSTOWN, MD. 21740
PHONE: (301)733-8503
or (301)416-7250
FAX: (301)733-1653
82 WORMANS MILL COURT
SUITE 'G'
FREDERICK, MD. 21701
PHONE: (301)695-0880
FAX: (301)293-6009
WWW.FOXASSOCIATESINC.COM Email: FOXFREDERICK@FOXASSOCIATESINC.COM

DATE	REVISION	DRAWN BY
11/2020	REVISED PER TOWN OF EMMITSBURG COMMENTS	

PAVING PLAN & PROFILE

IRISHTOWN ROAD

STA. 10+00 TO STA. 20+46.10

SITUATED ON THE WEST SIDE OF IRISHTOWN ROAD
TOWN OF EMMITSBURG, ELECTION DISTRICT No. 5
FREDERICK COUNTY, MARYLAND

SCALE: AS SHOWN

PROFESSIONAL CERTIFICATION

STATE OF MARYLAND JOSEPH H. CROUT PROFESSIONAL ENGINEER No. 30709
3/22/21

I HEREBY CERTIFY THAT THESE DOCUMENTS WERE PREPARED OR APPROVED BY ME, AND THAT I AM A DULY LICENSED PROFESSIONAL ENGINEER UNDER THE LAWS OF THE STATE OF MARYLAND.

LICENSE No.: 30709 EXP. DATE: 7/23/22

PROJECT NO. 18-50891
DRAWING NO. D - 3501
DATE: AUGUST 2020
DRAWN BY: JWE
CHECKED BY: JEM

SHEET 4 OF 15

LEGEND

- EXISTING UTILITY POLE
- EXISTING SIGN
- PROPOSED UTILITY POLE
- PROPOSED SIGN

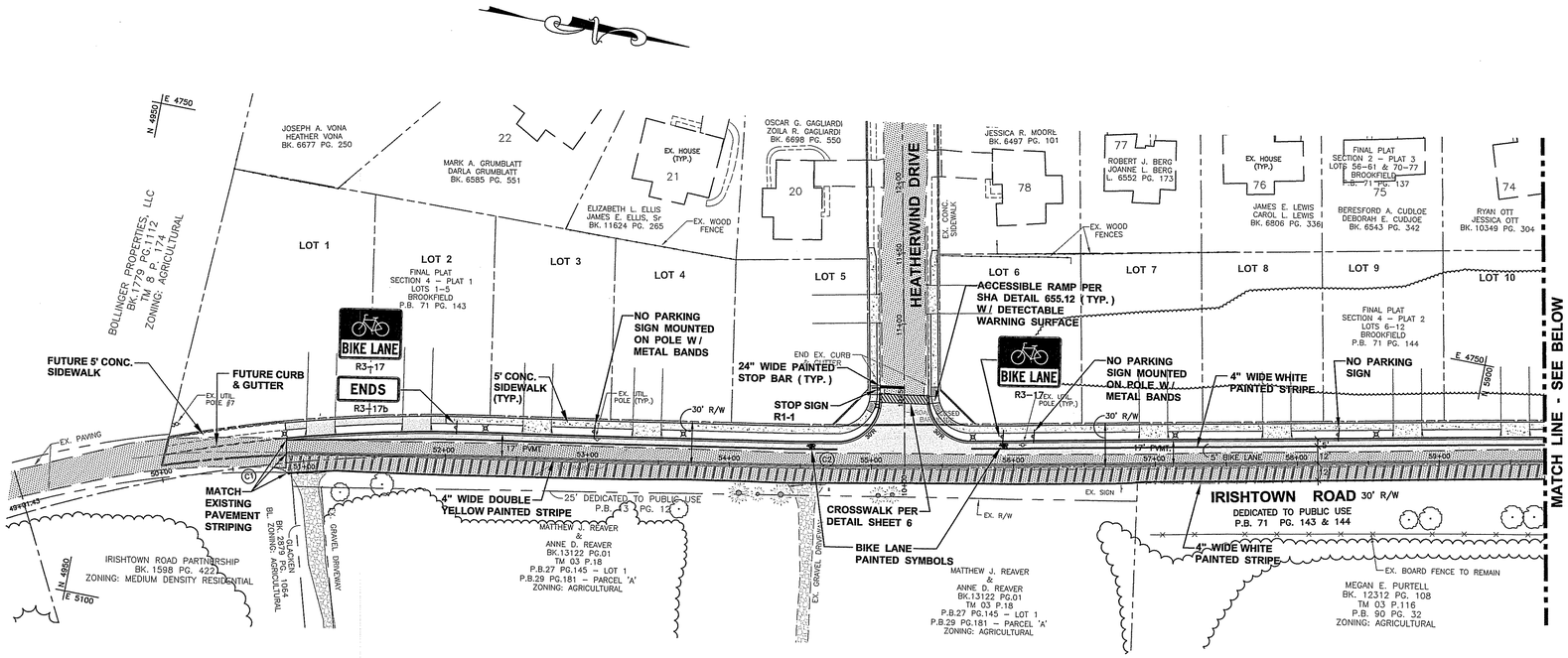

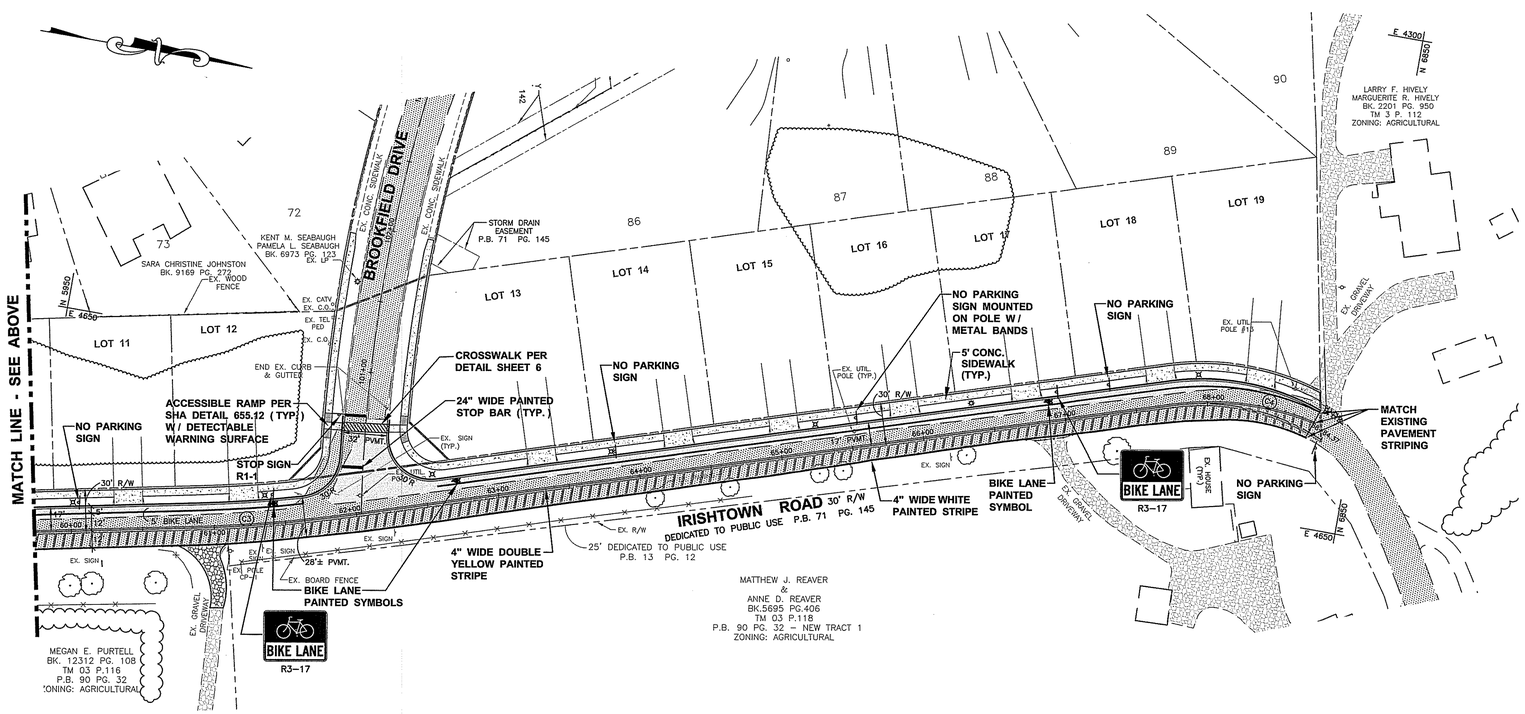

FOX & ASSOCIATES INC.
Est. 1966

FOX & ASSOCIATES, INC.
ENGINEERS • SURVEYORS • PLANNERS
981 MT. AETNA ROAD
HAGERSTOWN, MD. 21740
PHONE: (301)733-8503
or (301)416-7250
FAX: (301)733-1653
82 WORMANS MILL COURT
SUITE 'G'
FREDERICK, MD. 21701
PHONE: (301)695-0880
FAX: (301)293-6009
WWW.FOXASSOCIATESINC.COM Email: FOXFREDERICK@FOXASSOCIATESINC.COM

DATE	REVISION	DRAWN BY
11/2020	REVISED PER TOWN OF EMMITSBURG COMMENTS	

STRIPING AND SIGNAGE PLAN
IRISHTOWN ROAD

SITUATED ON THE WEST SIDE OF IRISHTOWN ROAD
TOWN OF EMMITSBURG, ELECTION DISTRICT No. 5
FREDERICK COUNTY, MARYLAND

SCALE: 1" = 50'

PROFESSIONAL CERTIFICATION

STATE OF MARYLAND
JOSEPH H. GREEN
No. 30109
PROFESSIONAL ENGINEER
3/22/21

I HEREBY CERTIFY THAT THESE DOCUMENTS WERE PREPARED OR APPROVED BY ME, AND THAT I AM A DULY LICENSED PROFESSIONAL ENGINEER UNDER THE LAWS OF THE STATE OF MARYLAND.

LICENSE No.: 30109 EXP. DATE: 7/23/22

PROJECT NO.	18-50891
DRAWING NO.	D - 3501
DATE:	AUGUST 2020
DRAWN BY:	JWE
CHECKED BY:	JEM

SHEET 5 OF 15

H:\CARLSON PROJECTS\18\50891 HIGHLAND DEVELOPMENT CORP\WD-01.DWG, 3/22/2021 11:21:20 AM, RICHINSON, 1:1

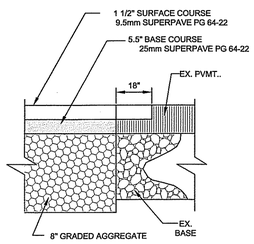

NOTES:
1. WHERE PROPOSED PAVEMENT CONNECTS TO EXISTING PAVEMENT, SAW CUT THE EX. PAVEMENT FOR THE FULL LENGTH OF THE CONNECTION. FOR THE 1 1/2" SURFACE COURSE, THE EX. PAVEMENT MUST BE MILLED BACK A MINIMUM OF 18" TO ALLOW FOR A SMOOTH OVERLAP.
2. FIELD ADJUSTMENTS SHALL BE MADE AS NECESSARY TO PROVIDE A SMOOTH TRANSITION BOTH VERTICALLY AND HORIZONTALLY FROM EXISTING TO PROPOSED PAVING SECTION.

PAVEMENT TIE-IN DETAIL
NOT TO SCALE

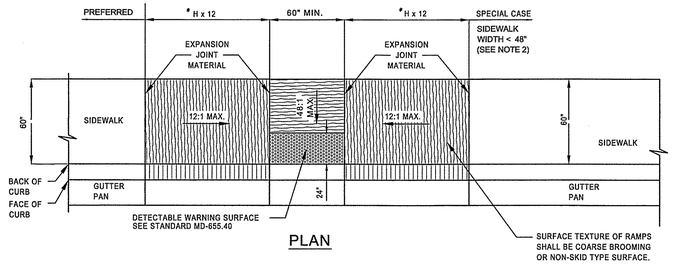

PLAN

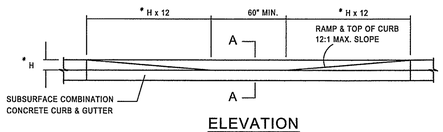

ELEVATION

* - H = HEIGHT OF CURB
ALL MEASUREMENTS IN INCHES

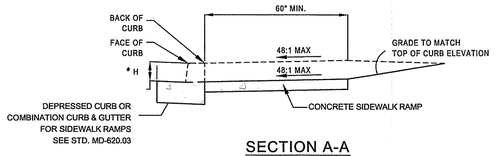

SECTION A-A

NOTES
1. TO BE USED WHERE SIDEWALK IS ADJACENT TO THE CURB. THIS STANDARD MAY BE MODIFIED TO SUIT A PARTICULAR LOCATION.
2. WHERE 60" SIDEWALK CAN NOT BE PROVIDED, A DESIGN WAIVER MUST BE REQUESTED.
3. NO TRAVERSABLE SLOPE ON THE RAMP OR SIDEWALK SHALL EXCEED 12:1 IN THE DIRECTION OF PEDESTRIAN TRAVEL, OR 48:1 PERPENDICULAR TO THE DIRECTION OF PEDESTRIAN TRAVEL.
4. EXPANSION JOINT MATERIAL SHALL BE INSTALLED IN ACCORDANCE WITH STD. MD-655.01.
5. SIDEWALK RAMPS TO BE SHOWN ON PLANS SYMBOLICALLY AND REFERENCED WITH THE CENTER OF THE RAMP ALIGNED TO A STATION ON THE CONSTRUCTION CENTERLINE. SEPARATE DETAILS SHALL BE SHOWN WHERE PROPOSED RAMP VARIES FROM STANDARD CASES.
6. TRANSITION PANELS TO TIE INTO EXISTING SIDEWALK MUST BE A MINIMUM OF 5' IN LENGTH.

SIDEWALK RAMP - PARALLEL
NOT TO SCALE

STANDARD NO. MD 655.12

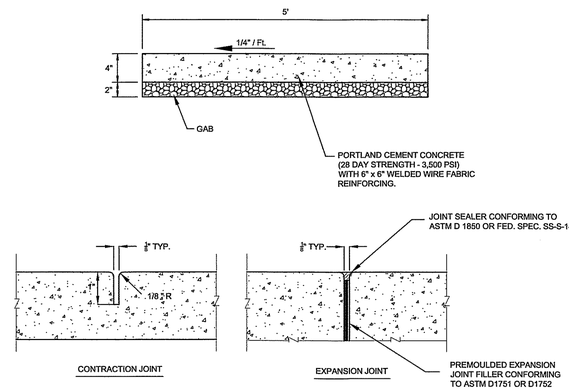

NOTES:
1. CONCRETE SHALL BE M.S.H.A. MIX NO. 3 CONCRETE AS DESIGNATED BY THE MARYLAND STATE HIGHWAY ADMINISTRATION SPECIFICATIONS.
2. CONCRETE SHALL BE SPRAYED WITH LIQUID CURING COMPOUND AS SOON AS FREE WATER HAS DISAPPEARED FROM THE SURFACE. CURING COMPOUND REQUIRED AS PER SPECIFICATION 32-16-13
3. FORMS SHALL BE STEEL FORMS WITH THE EXCEPTION OF APPROVED FLEXIBLE FORMS FOR RADIAL FORMATION.
4. SIDEWALK SHALL HAVE A LIGHT BROOM FINISH.
5. SIDEWALKS TO BE SCRIBED IN 5' MAXIMUM LENGTHS AND BRUSH FINISHED, EXPANSION JOINTS TO BE SPACED EVERY 15 FEET AND BETWEEN CURB AND SIDEWALK WHERE ADJACENT.

STANDARD CONCRETE SIDEWALK DETAIL
NOT TO SCALE

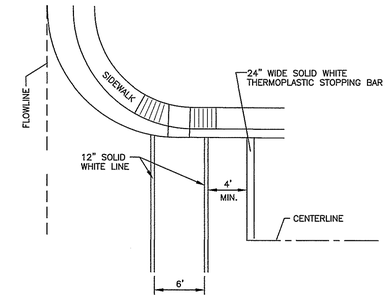

CROSSWALK & STOP BAR DETAIL
NOT TO SCALE

STOP
R1-1
30"X30"

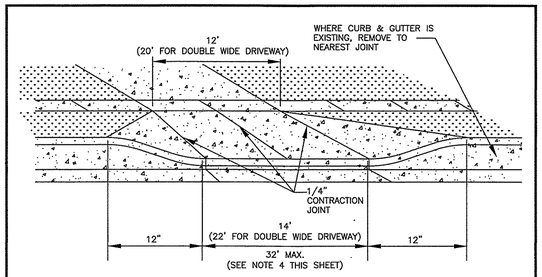

DRIVEWAY & CURB DETAIL
NTS

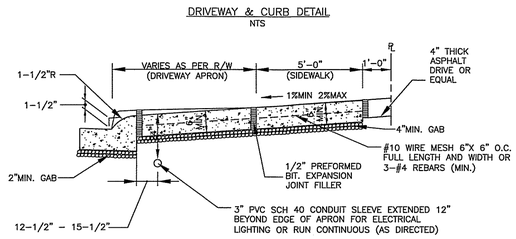

TYPICAL SECTION
NTS

NOTES:
1. SCORE 1/4" DUMMY CONTRACTION JOINTS AT 4'-0" INTERVALS.
2. CONSTRUCT 1/2" BITUMINOUS EXPANSION JOINTS AT 20'-0" (MAX.) INTERVALS.
3. CONCRETE SHALL BE SPRAYED WITH LIQUID CURING COMPOUND AS SOON AS FREE WATER HAS DISAPPEARED FROM THE SURFACE.
4. 32' MAXIMUM WIDTH IS SUBJECT TO APPROVAL ON A CASE BY CASE BASIS AND FOR COMMERCIAL USE.
5. CONCRETE TO BE MSHA MIX NO. 3.

TYPICAL DRIVEWAY APRON DETAIL
NOT TO SCALE

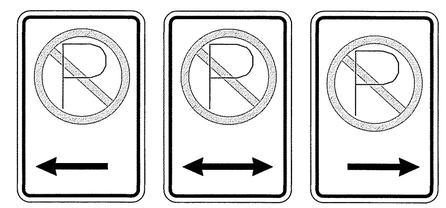

NO PARKING
R7-1
12"x18"
(A)

NO PARKING
R7-1
12"x18"
(C)

NO PARKING
R7-1
12"x18"
(B)

NOTE:
NO PARKING SIGNS ARE TO BE INSTALLED AT AN ANGLE OF NOT LESS THAN 30 DEGREES AND NOT MORE THAN 45 DEGREES WITH THE LINE OF TRAFFIC FLOW.

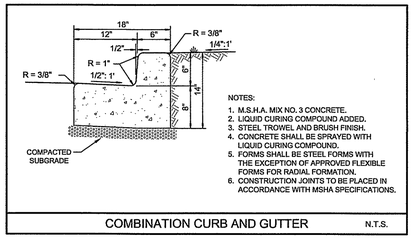

NOTES:
1. M.S.H.A. MIX NO. 3 CONCRETE.
2. LIQUID CURING COMPOUND ADDED.
3. STEEL TROWEL AND BRUSH FINISH.
4. CONCRETE SHALL BE SPRAYED WITH LIQUID CURING COMPOUND.
5. FORMS SHALL BE STEEL FORMS WITH THE EXCEPTION OF APPROVED FLEXIBLE FORMS FOR RADIAL FORMATION.
6. CONSTRUCTION JOINTS TO BE PLACED IN ACCORDANCE WITH MSHA SPECIFICATIONS.

COMBINATION CURB AND GUTTER N.T.S.

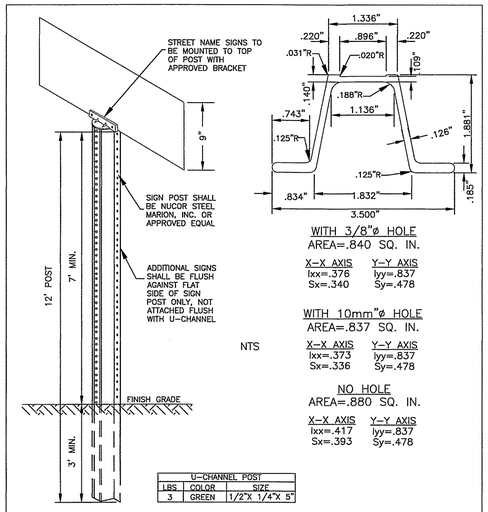

WITH 3/8"ø HOLE
AREA=.840 SQ. IN.

X-X AXIS	Y-Y AXIS
Ixx=.376	Iyy=.837
Sx=.340	Sy=.478

WITH 10mm"ø HOLE
AREA=.837 SQ. IN.

X-X AXIS	Y-Y AXIS
Ixx=.373	Iyy=.837
Sx=.336	Sy=.478

NO HOLE
AREA=.880 SQ. IN.

X-X AXIS	Y-Y AXIS
Ixx=.417	Iyy=.837
Sx=.393	Sy=.478

NTS

U-CHANNEL POST		
LBS	COLOR	SIZE
3	GREEN	1/2"X 1/4"X 5"

NOTES
1. SIGN POST SHALL BE NUCOR STEEL MARION, INC. OR APPROVED EQUAL
2. DETAILS ARE NOT TO SCALE.
3. 12' POST TO BE DRIVEN INTO GROUND WITH NO SPLICES.
4. FOR ADDED HEIGHT TO SIGN, BOLT 3LB POST TO FRONT SIDE OF THE POST DRIVEN IN GROUND.

The City of Frederick Maryland

3 LB. POST & INSTALLATION

APPROVED: DIRECTOR-DEPARTMENT PUBLIC WORKS

T-6.0

TEMPORARY TRAFFIC CONTROL TYPICAL APPLICATION

IMPORTANT:
THIS DRAWING SHALL BE USED IN COMBINATION WITH THE GENERAL NOTES MD 104.00-01 - MD 104.00-18 AND STANDARD DETAILS MD 104.01-01 - MD 104.01-81

NOTE:
FLAGGER SHALL NEVER BE STATIONED MORE THAN 1000' AWAY FROM THE ADVANCE FLAGGER SIGN.

THE ENGINEER SHOULD CONSIDER ADDITIONAL ADJACENT LANE CLOSURES WHEN THE POSSIBILITY OF UNPLANNED TRAVELWAY ENCROACHMENTS EXISTS.

KEY:
- CHANNELIZING DEVICES
- SIGN SUPPORT
- FACE OF SIGN
- DIRECTION OF TRAFFIC
- WORK SITE
- FLAGGER

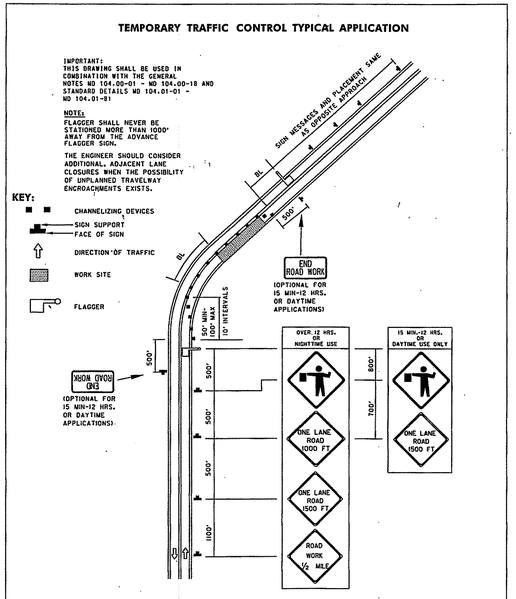

SPECIFICATION	CATEGORY CODE ITEMS
104	

APPROVED

DIRECTOR - OFFICE OF TRAFFIC AND SAFETY	
APPROVAL + SHA REVISIONS	APPROVAL + FEDERAL HIGHWAY ADMINISTRATION
APPROVAL 8-20-03	APPROVAL 9-23-03
REVISED 8-11-10	REVISED 7-29-10
REVISED	REVISED
REVISED	REVISED

SHA State Highway Administration

Maryland Department of Transportation
STATE HIGHWAY ADMINISTRATION
STANDARDS FOR HIGHWAYS AND INCIDENTAL STRUCTURES

FLAGGING OPERATION/2-LANE, 2-WAY EQL/LESS THAN 40 MPH

STANDARD NO. MD 104.02-10

FOX & ASSOCIATES INC.
Est. 1966

FOX & ASSOCIATES, INC.
ENGINEERS • SURVEYORS • PLANNERS
991 MT. AETNA ROAD
HAGERSTOWN, MD. 21740
PHONE: (301)733-8503
FAX: (301)733-1853
82 WORMANS MILL COURT
SUITE "B"
FREDERICK, MD. 21701
PHONE: (301)695-0860
FAX: (301)293-6009
WWW.FOXASSOCIATESINC.COM Email: FOXFREDERICK@FOXASSOCIATESINC.COM

DATE	REVISION	DRAWN BY
11/2020	REVISED PER TOWN OF EMMITSBURG COMMENTS	

PAVING NOTES AND DETAILS
IRISHTOWN ROAD
SITUATED ON THE WEST SIDE OF IRISHTOWN ROAD
TOWN OF EMMITSBURG, ELECTION DISTRICT No. 5
FREDERICK COUNTY, MARYLAND

SCALE: AS SHOWN

PROFESSIONAL CERTIFICATION

STATE OF MARYLAND JOSEPH H. OLIVO No. 30709 PROFESSIONAL ENGINEER

3/22/21

I HEREBY CERTIFY THAT THESE DOCUMENTS WERE PREPARED OR APPROVED BY ME, AND THAT I AM A DULY LICENSED PROFESSIONAL ENGINEER UNDER THE LAWS OF THE STATE OF MARYLAND.

LICENSE No.: 30709 EXP. DATE: 7/23/22

PROJECT NO. 18-50891
DRAWING NO. D - 3501
DATE: AUGUST 2020
DRAWN BY: JWE
CHECKED BY: JEM

SHEET 6 OF 15

GENERAL NOTES

All bicycle lane pavement markings shall be white unless otherwise noted.

All pavement marking materials shall meet the required Department Material Specifications as specified by the plans.

The current edition of AASHTO'S Guide for the Development of Bicycle Facilities should be referenced for variations in design, other geometric conditions, and lane width options.

Other bicycle lane symbol or word markings as shown in the Manual on Uniform Traffic Control Devices may be used.

BIKE LANE
R3-17

The "BIKE LANE" (R3-17) sign with the "AHEAD" (R3-17a)sign mounted directly below should be installed in advance of the beginning of a marked bike lane.

The "BIKE LANE" (R3-17) sign with the "END" (R3-17b)sign mounted directly below should be installed at the end of marked bicycle lane.

H:\CARLSON PROJECTS\18\50891 HIGHLAND DEVELOPMENT CORP\MD-01.DWG, 3/22/2021 11:19:21 AM, RORCHINSKI, 1:1

SEWER MANHOLE SCHEDULE

MANHOLE	℄ STATION	℄ OFFSET	RIM ELEV.
284	51+35.69	12.05' L	483.56
285	55+27.14	11.00' L	479.67
286	59+26.75	11.00' L	485.85
287	61+38.07	9.69' L	492.55
288	65+32.55	11.00' L	502.65
289	67+98.42	12.79' L	519.01

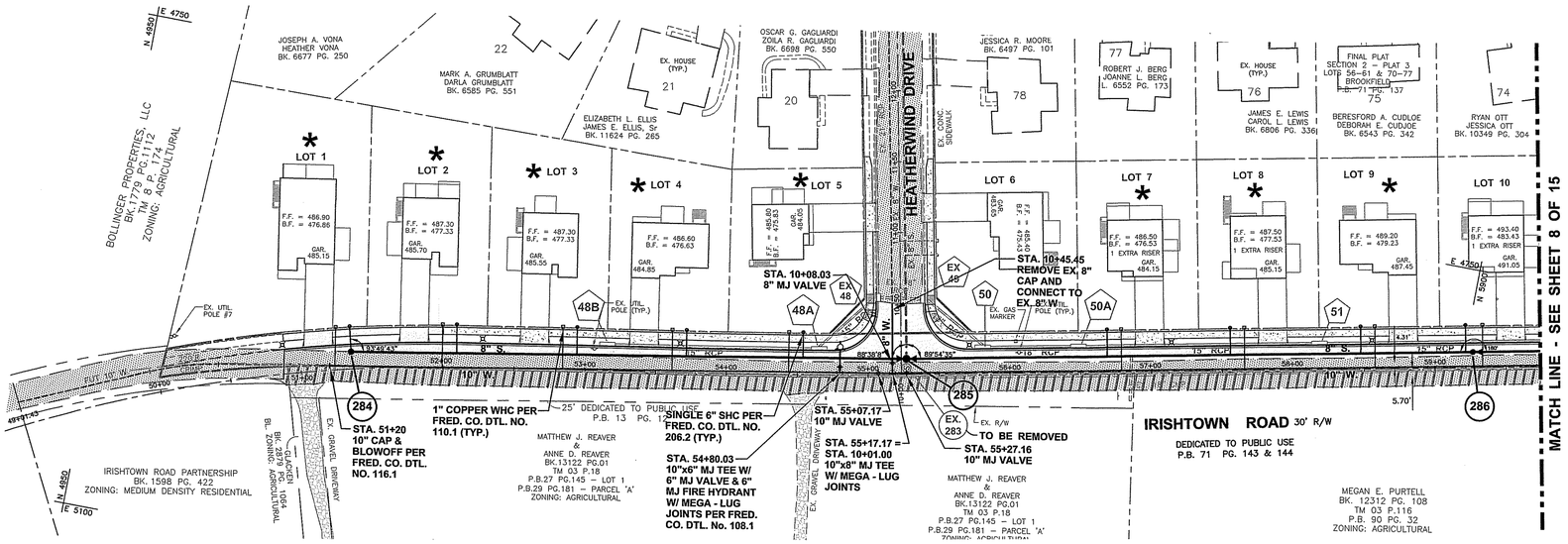

NOTES:

1. CONTRACTOR SHALL TEST PIT EXISTING UTILITIES AT ALL CROSSINGS AND PROPOSED CONNECTION POINTS TO DETERMINE EXACT HORIZONTAL & VERTICAL LOCATION.

2. EXCAVATED MATERIAL SHALL BE PLACED ON THE HIGH SIDE OF THE TRENCH. ALL TRENCHES SHALL BE BACK-FILLED AND STABILIZATION ON ALL DISTURBED AREAS SHALL OCCUR AT THE END OF EACH WEEK, EXCEPT FOR THE PORTION NECCESSARY TO RESUME CONSTRUCTION. ANY DISTURBED AREAS OR STOCKPILES NOT STABILIZED AT THE END OF EACH DAY SHALL BE PROTECTED AND HAVE SEDIMENT CONTROLLED BY THE USE OF STRAW BALE DIKES, EARTH BERMS AND SILT FENCES AS DIRECTED BY THE SEDIMENT CONTROL INSPECTOR.

SCALES
PLAN: 1" = 50'
PROFILE: HORIZ. – 1" = 50'
VERT. – 1" = 5'

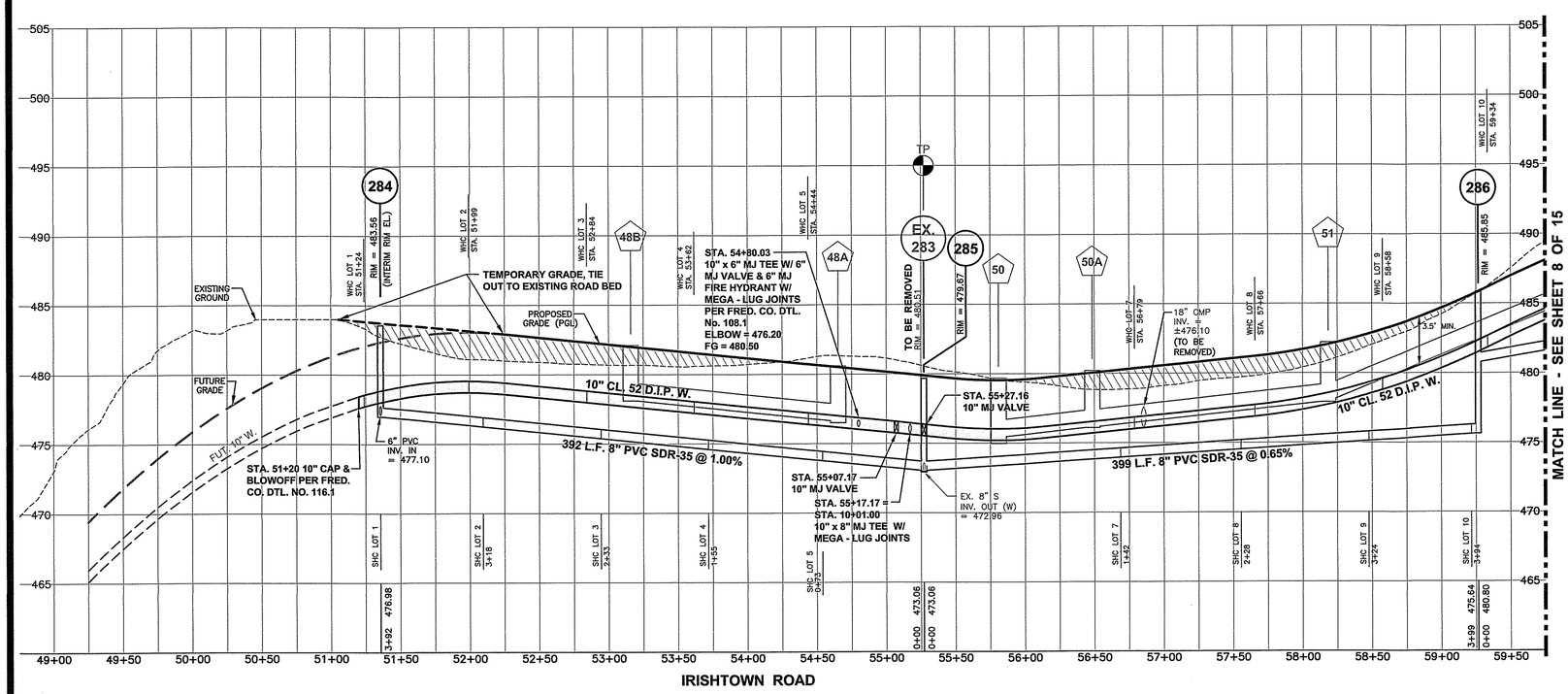

*** BASEMENT CANNOT BE SEWERED BY GRAVITY**

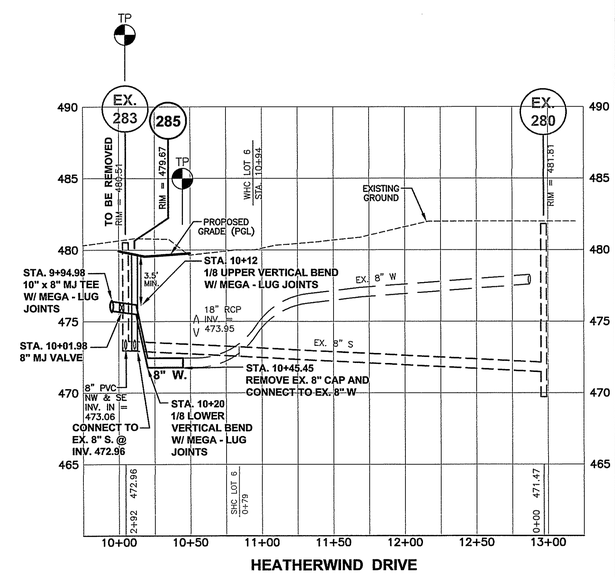

FOX & ASSOCIATES INC.
Est. 1966
FOX & ASSOCIATES, INC.
ENGINEERS • SURVEYORS • PLANNERS
981 MT. AETNA ROAD
HAGERSTOWN, MD. 21740
PHONE: (301)733-8503
or (301)416-7250
FAX: (301)733-1853
82 WORMANS MILL COURT
SUITE 'G'
FREDERICK, MD. 21701
PHONE: (301)695-0880
FAX: (301)293-6009
WWW.FOXASSOCIATESINC.COM Email: FOXFREDERICK@FOXASSOCIATESINC.COM

	DATE	REVISION	DRAWN BY
	11/2020	REVISED PER TOWN OF EMMITSBURG COMMENTS	

UTILITY PLAN & PROFILE
IRISHTOWN ROAD
STA. 50+00 TO STA. 59+75
SITUATED ON THE WEST SIDE OF IRISHTOWN ROAD
TOWN OF EMMITSBURG, ELECTION DISTRICT No. 5
FREDERICK COUNTY, MARYLAND

SCALE: AS SHOWN

PROFESSIONAL CERTIFICATION

STATE OF MARYLAND JOSEPH H. CROSS PROFESSIONAL ENGINEER No. 30709 3/22/21

I HEREBY CERTIFY THAT THESE DOCUMENTS WERE PREPARED OR APPROVED BY ME, AND THAT I AM A DULY LICENSED PROFESSIONAL ENGINEER UNDER THE LAWS OF THE STATE OF MARYLAND.

LICENSE No.: 30709 EXP. DATE: 7/23/22

PROJECT NO. 18-50891
DRAWING NO. D-3501
DATE: AUGUST 2020
DRAWN BY: JWE
CHECKED BY: JEM

SHEET 7 OF 15

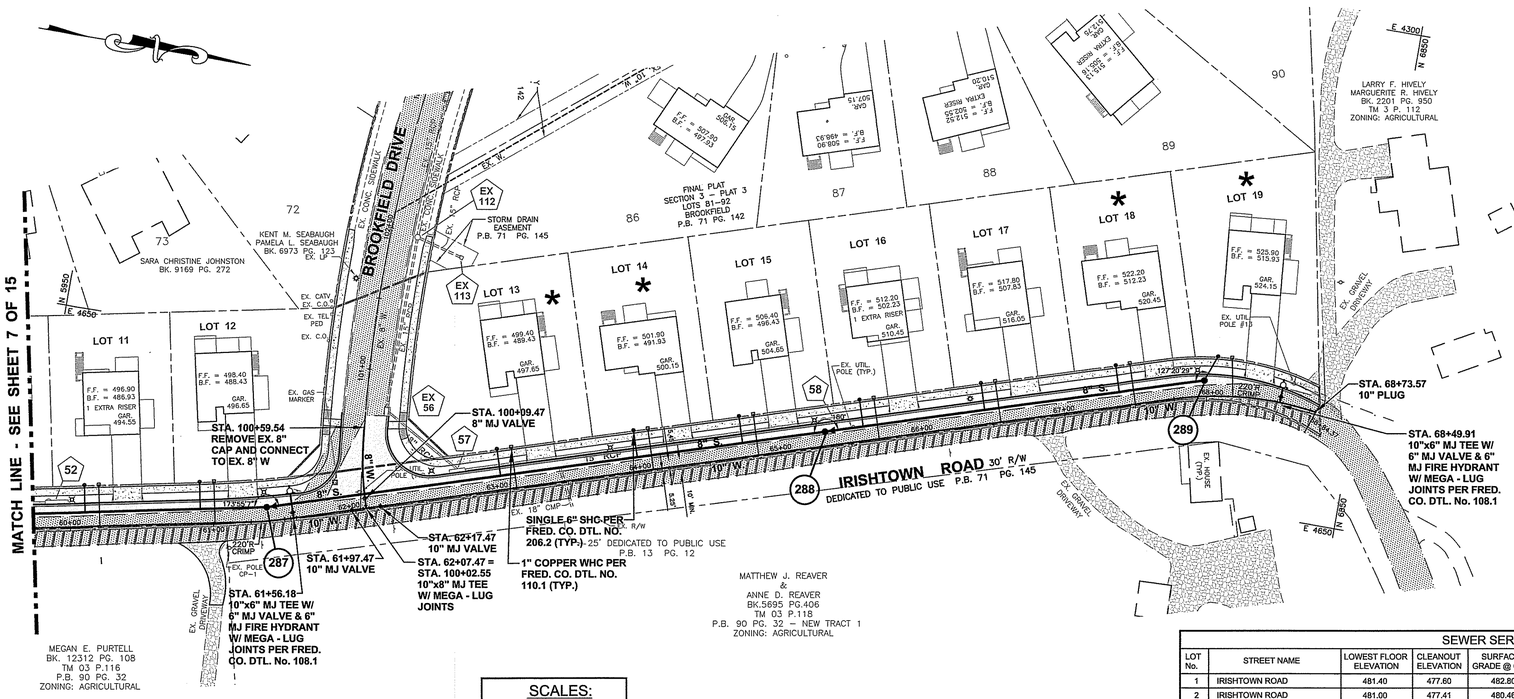

LEGEND

EX. 8" W.	EXISTING WATER LINE
EX. 8" S.	EXISTING SEWER LINE
EX. 18" RCP	EXISTING STORM DRAIN
PROP. 10" W.	PROPOSED WATER LINE
PROP. 8" S.	PROPOSED SEWER LINE

SCALES:

PLAN VIEW: 1" = 50'

PROFILE: HORIZ. - 1" = 50'
VERT. - 1" = 5'

NOTES:

1. CONTRACTOR SHALL TEST PIT EXISTING UTILITIES AT ALL CROSSINGS AND PROPOSED CONNECTION POINTS TO DETERMINE EXACT HORIZONTAL & VERTICAL LOCATION.
2. EXCAVATED MATERIAL SHALL BE PLACED ON THE HIGH SIDE OF THE TRENCH. ALL TRENCHES SHALL BE BACK-FILLED AND STABILIZATION ON ALL DISTURBED AREAS SHALL OCCUR AT THE END OF EACH WEEK, EXCEPT FOR THE PORTION NECCESSARY TO RESUME CONSTRUCTION. ANY DISTURBED AREAS OR STOCKPILES NOT STABILIZED AT THE END OF EACH DAY SHALL BE PROTECTED AND HAVE SEDIMENT CONTROLLED BY THE USE OF STRAW BALE DIKES, EARTH BERMS AND SILT FENCES AS DIRECTED BY THE SEDIMENT CONTROL INSPECTOR.

*** BASEMENT CANNOT BE SEWERED BY GRAVITY**

SEWER SERVICE CONNECTIONS

LOT No.	STREET NAME	LOWEST FLOOR ELEVATION	CLEANOUT ELEVATION	SURFACE GRADE @ C.O.	TYPE	AS-BUILT INFORMATION					
						SEWER STATION	U/S MH	D/S MH	LENGTH	DEPTH	REMARKS
1	IRISHTOWN ROAD	481.40	477.60	482.80	A	MH 284					
2	IRISHTOWN ROAD	481.00	477.41	480.46	A	3+18					
3	IRISHTOWN ROAD	480.00	476.56	482.61	A	2+33					
4	IRISHTOWN ROAD	479.10	475.78	481.84	A	1+55					
5	IRISHTOWN ROAD	478.56	474.96	481.02	A	0+73					
7	IRISHTOWN ROAD	478.45	475.15	480.64	A	1+42					
8	IRISHTOWN ROAD	479.20	475.71	481.61	A	2+28					
9	IRISHTOWN ROAD	479.60	476.34	483.23	A	3+21					
10	IRISHTOWN ROAD	480.20	476.79	486.02	A	3+94					
11	IRISHTOWN ROAD	486.80	483.40	489.90	A	0+84					
12	IRISHTOWN ROAD	487.40	484.76	492.33	A	1+64					
13	IRISHTOWN ROAD	492.48	488.88	494.87	A	1+65					
14	IRISHTOWN ROAD	494.00	490.69	497.10	A	2+52					
15	IRISHTOWN ROAD	495.50	492.09	500.12	A	3+36					
16	IRISHTOWN ROAD	502.20	498.83	504.95	A	0+27					
17	IRISHTOWN ROAD	507.50	504.14	511.16	A	1+13					
18	IRISHTOWN ROAD	513.40	510.00	517.01	A	2+08					
19	IRISHTOWN ROAD	517.70	514.10	500.21	A	MH 289					

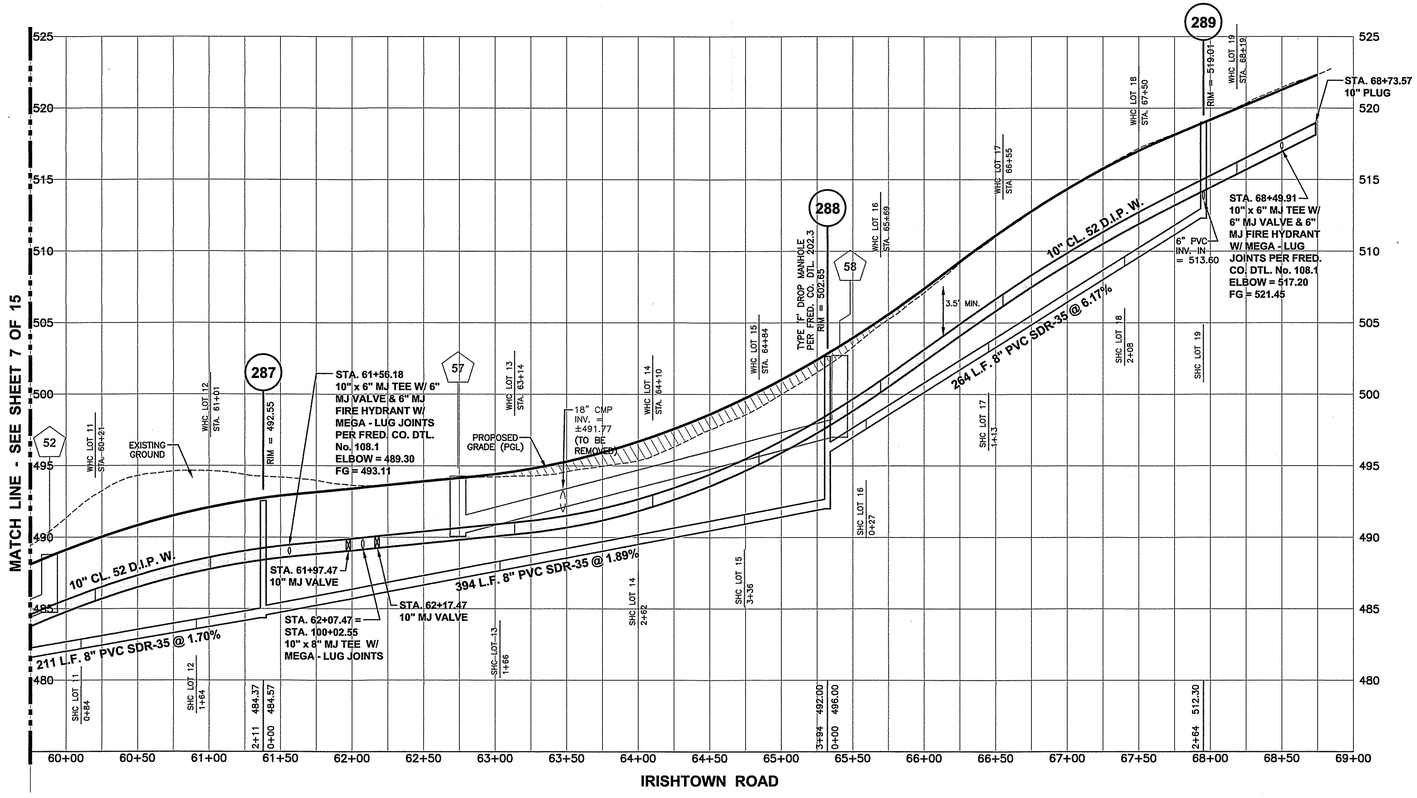

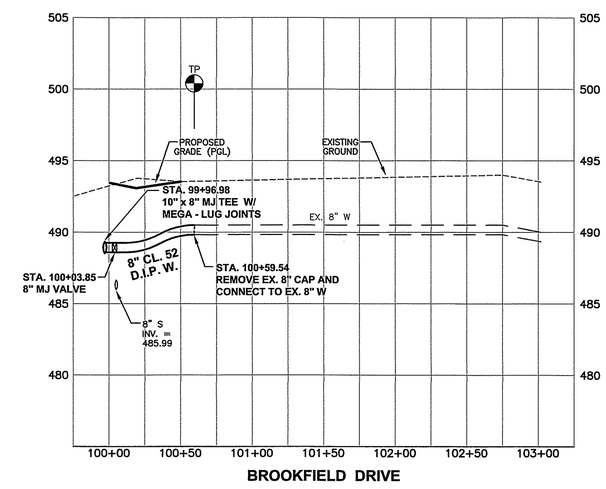

FOX & ASSOCIATES INC.
Est. 1966

FOX & ASSOCIATES, INC.
ENGINEERS • SURVEYORS • PLANNERS
981 MT. AETNA ROAD
HAGERSTOWN, MD. 21740
PHONE: (301)733-8503
FAX: (301)733-1853
82 WORMANS MILL COURT
SUITE E
FREDERICK, MD. 21701
PHONE: (301)695-0880
FAX: (301)233-6009
WWW.FOXASSOCIATESINC.COM Email: FOXFREDERICK@FOXASSOCIATESINC.COM

DATE	REVISION	DRAWN BY
11/2020	REVISED PER TOWN OF EMMITSBURG COMMENTS	

UTILITY PLAN & PROFILE
IRISHTOWN ROAD
STA. 10+00 TO STA. 20+46.10

SITUATED ON THE WEST SIDE OF IRISHTOWN ROAD
TOWN OF EMMITSBURG, ELECTION DISTRICT No. 5
FREDERICK COUNTY, MARYLAND

SCALE: AS SHOWN

PROFESSIONAL CERTIFICATION

STATE OF MARYLAND — JOSEPH H. OTT — No. 30709 — PROFESSIONAL ENGINEER

3/22/21

I HEREBY CERTIFY THAT THESE DOCUMENTS WERE PREPARED OR APPROVED BY ME, AND THAT I AM A DULY LICENSED PROFESSIONAL ENGINEER UNDER THE LAWS OF THE STATE OF MARYLAND.

LICENSE No.: 30709 EXP. DATE: 7/23/22

PROJECT NO. 18-50891
DRAWING NO. D - 3501
DATE: AUGUST 2020
DRAWN BY: JWE
CHECKED BY: JEM

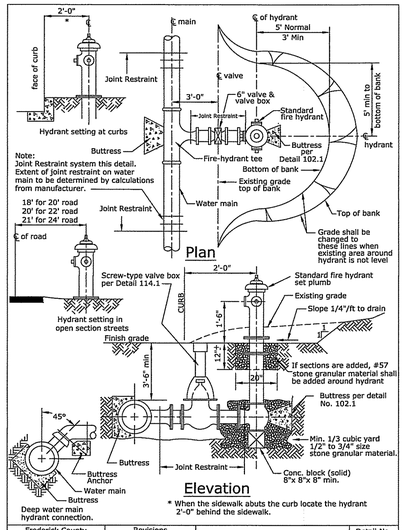

NOTE: PER TOWN OF EMMITSBURG CODE ALL FIRE HYDRANTS SHALL BE THE M+H MODEL 929 WITH A FIVE INCH STORTZ CONNECTION ON THE PUMPER NOZZLE / STEAMER CONNECTION

Frederick County Division of Utilities & Solid Waste Management / Department of Engineering & Planning	Revisions (Date, Note)	Fire Hydrant Setting and Grading	Detail No. 108.1	Date: 01-24-2013

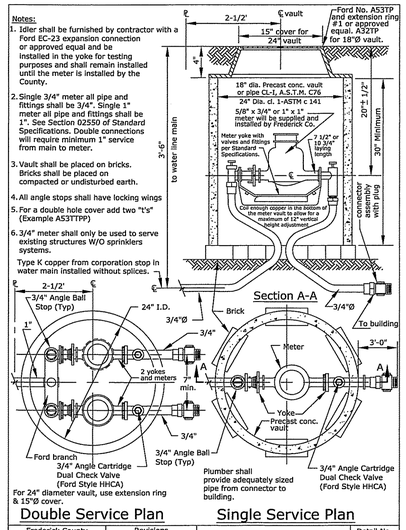

Frederick County Division of Utilities & Solid Waste Management / Department of Engineering & Planning	Revisions (Date, Note)	3/4" & 1" Water Meter Setting	Detail No. 110.1	Date: 01-24-2013

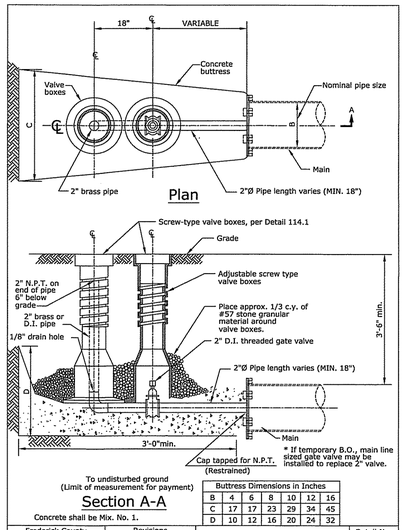

B	4	6	8	10	12	16
C	17	17	23	29	34	45
D	10	12	16	20	24	32

Buttress Dimensions in Inches

Frederick County Division of Utilities & Solid Waste Management / Department of Engineering & Planning	Revisions (Date, Note)	Cap and Blow-off at End of Main Modified	Detail No. 116.1	Date: 01-24-2013

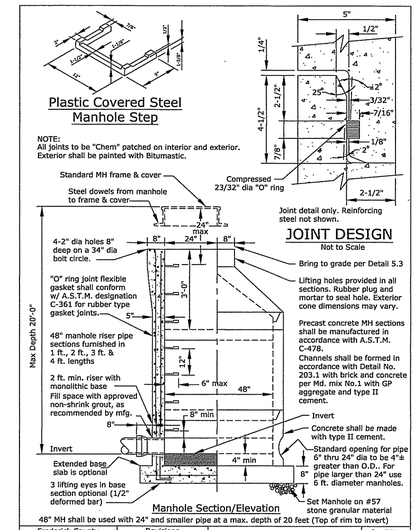

Frederick County Division of Utilities & Solid Waste Management / Department of Engineering & Planning	Revisions (Date, Note)	Precast Concrete Manhole Detail 48" Diameter	Detail No. 201.1	Date: 01-24-2013

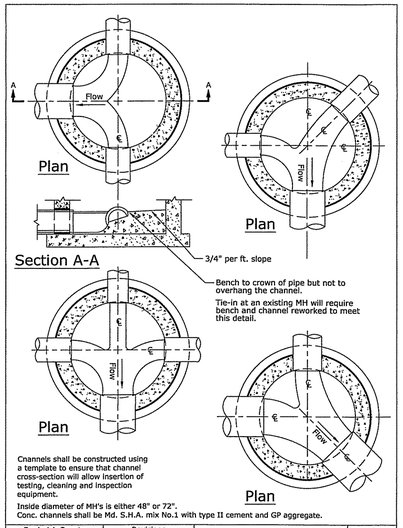

Frederick County Division of Utilities & Solid Waste Management / Department of Engineering & Planning	Revisions (Date, Note)	Channel Layout for Sewer Manhole Bases	Detail No. 203.1	Date: 01-24-2013

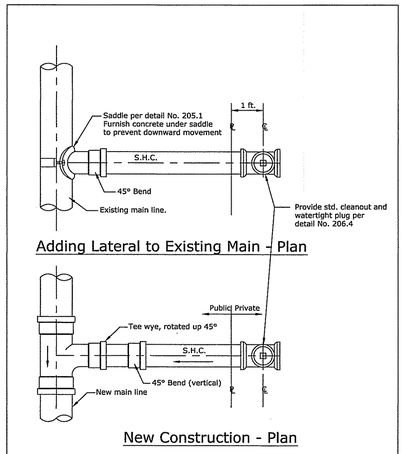

Notes:
1. Abbreviation for sewer service connection is S.H.C.
2. S.H.C. to be laid at a minimum 2% - maximum 5%, per section 2570, III.C.

Frederick County Division of Utilities & Solid Waste Management / Department of Engineering & Planning	Revisions (Date, Note)	House Connection Fittings for Sewer	Detail No. 206.2	Date: 01-24-2013

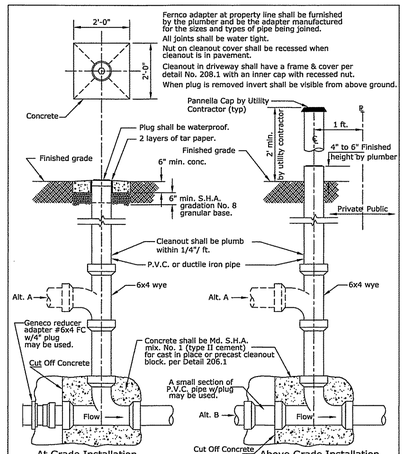

Frederick County Division of Utilities & Solid Waste Management / Department of Engineering & Planning	Revisions (Date, Note)	Standard Cleanout for Sanitary House Connection	Detail No. 206.4	Date: 01-24-2013

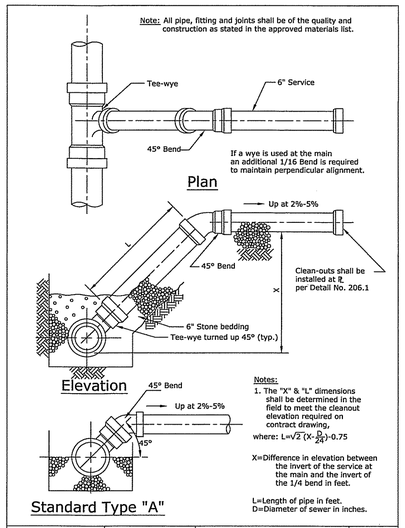

Frederick County Division of Utilities & Solid Waste Management / Department of Engineering & Planning	Revisions (Date, Note)	Standard & Type A Drop House Connection	Detail No. 209.1	Date: 01-24-2013

Drop Connections

Nom. Pipe Ø	Type "E" Max. Drop	Type "E" Min. Drop	Type "F" Min. Drop
6"-8"	3'-9'	1'-9"	3'-9'
10"	4'-0"	2'-0"	4'-0"
12"	6'-0"	2'-6"	6'-0"
15"	6'-0"	2'-6"	6'-0"

Notes:
1. P.V.C. pipe shall be provided as per the "General Conditions and Standard Specifications."
2. All fittings shall be the same type of material as that used for the main lines.
3. Concrete shall be MSHA mix no.1.

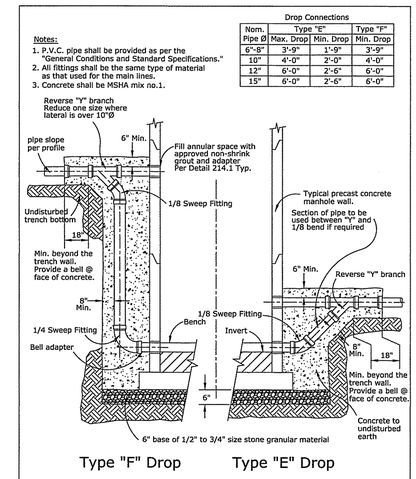

Note: 6" sewer service connection slope shall be 2%-5%.

Frederick County Division of Utilities & Solid Waste Management / Department of Engineering & Planning	Revisions (Date, Note)	Outside Drop Manhole Types "E" & "F"	Detail No. 202.3	Date: 01-24-2013

FOX & ASSOCIATES INC.
Est. 1966
FOX & ASSOCIATES, INC.
ENGINEERS • SURVEYORS • PLANNERS
981 MT. AETNA ROAD
HAGERSTOWN, MD. 21740
PHONE: (301)733-8503
or (301)416-7250
FAX: (301)733-1853
82 WORMANS MILL COURT
SUITE 'G'
FREDERICK, MD. 21701
PHONE: (301)695-0880
FAX: (301)293-6009
WWW.FOXASSOCIATESINC.COM Email: FOXFREDERICK@FOXASSOCIATESINC.COM

DATE	REVISION	DRAWN BY
11/2020	REVISED PER TOWN OF EMMITSBURG COMMENTS	

UTILITY NOTES AND DETAILS

IRISHTOWN ROAD

SITUATED ON THE WEST SIDE OF IRISHTOWN ROAD
TOWN OF EMMITSBURG, ELECTION DISTRICT No. 5
FREDERICK COUNTY, MARYLAND

SCALE: AS SHOWN

PROFESSIONAL CERTIFICATION

STATE OF MARYLAND JOSEPH H. GEGO PROFESSIONAL ENGINEER No. 30109
3/22/21

I HEREBY CERTIFY THAT THESE DOCUMENTS WERE PREPARED OR APPROVED BY ME, AND THAT I AM A DULY LICENSED PROFESSIONAL ENGINEER UNDER THE LAWS OF THE STATE OF MARYLAND.

LICENSE No.: 30109 EXP. DATE: 7/29/22

PROJECT NO.	18-50891
DRAWING NO.	D - 3501
DATE:	AUGUST 2020
DRAWN BY:	JWE
CHECKED BY:	JEM

SHEET 9 OF 14

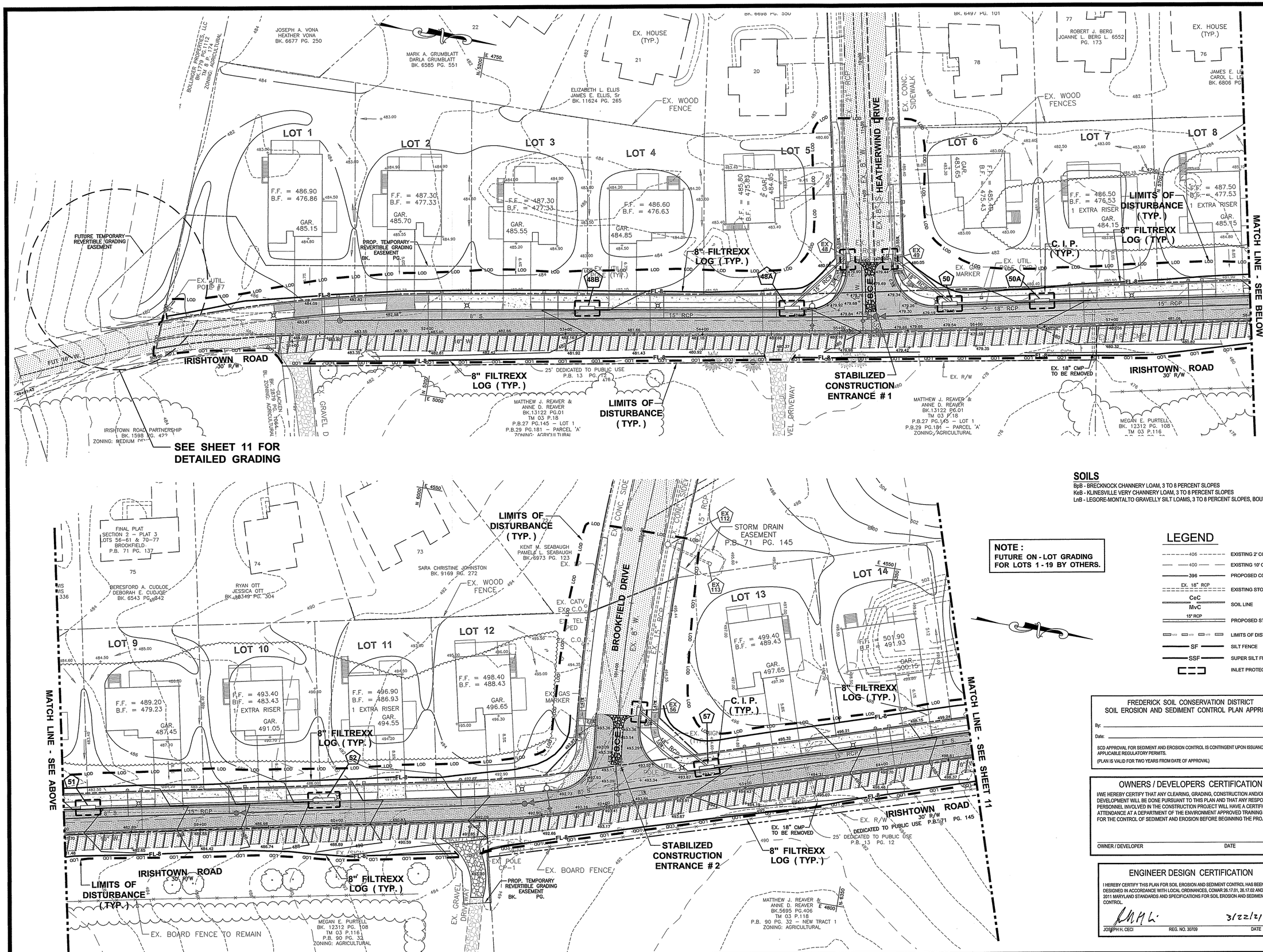

SOILS

BpB - BRECKNOCK CHANNERY LOAM, 3 TO 8 PERCENT SLOPES
KaB - KLINESVILLE VERY CHANNERY LOAM, 3 TO 8 PERCENT SLOPES
LnB - LEGORE-MONTALTO GRAVELLY SILT LOAMS, 3 TO 8 PERCENT SLOPES, BOULDERY

NOTE :
FUTURE ON - LOT GRADING FOR LOTS 1 - 19 BY OTHERS.

LEGEND

406	EXISTING 2' CONTOUR
400	EXISTING 10' CONTOUR
396	PROPOSED CONTOUR
EX. 18" RCP	EXISTING STORM DRAIN
CeC / MvC	SOIL LINE
15" RCP	PROPOSED STORM DRAIN
LOD	LIMITS OF DISTURBANCE
SF	SILT FENCE
SSF	SUPER SILT FENCE
	INLET PROTECTION

FREDERICK SOIL CONSERVATION DISTRICT
SOIL EROSION AND SEDIMENT CONTROL PLAN APPROVAL

By: _____

Date: _____

SCD APPROVAL FOR SEDIMENT AND EROSION CONTROL IS CONTINGENT UPON ISSUANCE OF ALL APPLICABLE REGULATORY PERMITS.
(PLAN IS VALID FOR TWO YEARS FROM DATE OF APPROVAL)

OWNERS / DEVELOPERS CERTIFICATION

I/WE HEREBY CERTIFY THAT ANY CLEARING, GRADING, CONSTRUCTION AND/OR DEVELOPMENT WILL BE DONE PURSUANT TO THIS PLAN AND THAT ANY RESPONSIBLE PERSONNEL INVOLVED IN THE CONSTRUCTION PROJECT WILL HAVE A CERTIFICATE OF ATTENDANCE AT A DEPARTMENT OF THE ENVIRONMENT APPROVED TRAINING PROGRAM FOR THE CONTROL OF SEDIMENT AND EROSION BEFORE BEGINNING THE PROJECT.

OWNER / DEVELOPER _____ DATE _____

ENGINEER DESIGN CERTIFICATION

I HEREBY CERTIFY THIS PLAN FOR SOIL EROSION AND SEDIMENT CONTROL HAS BEEN DESIGNED IN ACCORDANCE WITH LOCAL ORDINANCES, COMAR 26.17.01, 26.17.02 AND THE 2011 MARYLAND STANDARDS AND SPECIFICATIONS FOR SOIL EROSION AND SEDIMENT CONTROL.

JOSEPH H. CECI REG. NO. 30709 DATE 3/22/21

FOX & ASSOCIATES INC.
Est. 1966

FOX & ASSOCIATES, INC.
ENGINEERS•SURVEYORS•PLANNERS
981 MT. AETNA ROAD
HAGERSTOWN, MD. 21740
PHONE: (301)733-8503
or (301)416-7250
FAX: (301)733-1853
82 WORMANS MILL COURT
SUITE 'G'
FREDERICK, MD. 21701
PHONE: (301)695-0880
FAX: (301)293-6009
WWW.FOXASSOCIATESINC.COM Email: FOXFREDERICK@FOXASSOCIATESINC.COM

DATE	REVISION	DRAWN BY
11/2020	REVISED PER TOWN OF EMMITSBURG COMMENTS	

GRADING, STORM DRAIN AND SEDIMENT CONTROL PLAN

IRISHTOWN ROAD

SITUATED ON THE WEST SIDE OF IRISHTOWN ROAD
TOWN OF EMMITSBURG, ELECTION DISTRICT No. 5
FREDERICK COUNTY, MARYLAND

SCALE: 1" = 30'

PROFESSIONAL CERTIFICATION

STATE OF MARYLAND JOSEPH H. CECI REGISTERED PROFESSIONAL ENGINEER 30709 3/22/21

I HEREBY CERTIFY THAT THESE DOCUMENTS WERE PREPARED OR APPROVED BY ME, AND THAT I AM A DULY LICENSED PROFESSIONAL ENGINEER UNDER THE LAWS OF THE STATE OF MARYLAND.

LICENSE No.: 30709 EXP. DATE: 7/23/22

PROJECT NO.	18-50891
DRAWING NO.	D - 3501
DATE:	AUGUST 2020
DRAWN BY:	JWE
CHECKED BY:	JEM

SHEET 10 OF 15

H:\CARLSON PROJECTS\18\50891 HIGHLAND DEVELOPMENT CORP\WD-01.DWG, 3/22/2021 11:12:41 AM, ROCKNGRSON, 1:1

LEGEND

406	EXISTING 2' CONTOUR
400	EXISTING 10' CONTOUR
396	PROPOSED CONTOUR
EX. 18" RCP	EXISTING STORM DRAIN
CeC / MvC	SOIL LINE
15" RCP	PROPOSED STORM DRAIN
LOD	LIMITS OF DISTURBANCE
SF	SILT FENCE
SSF	SUPER SILT FENCE
	INLET PROTECTION

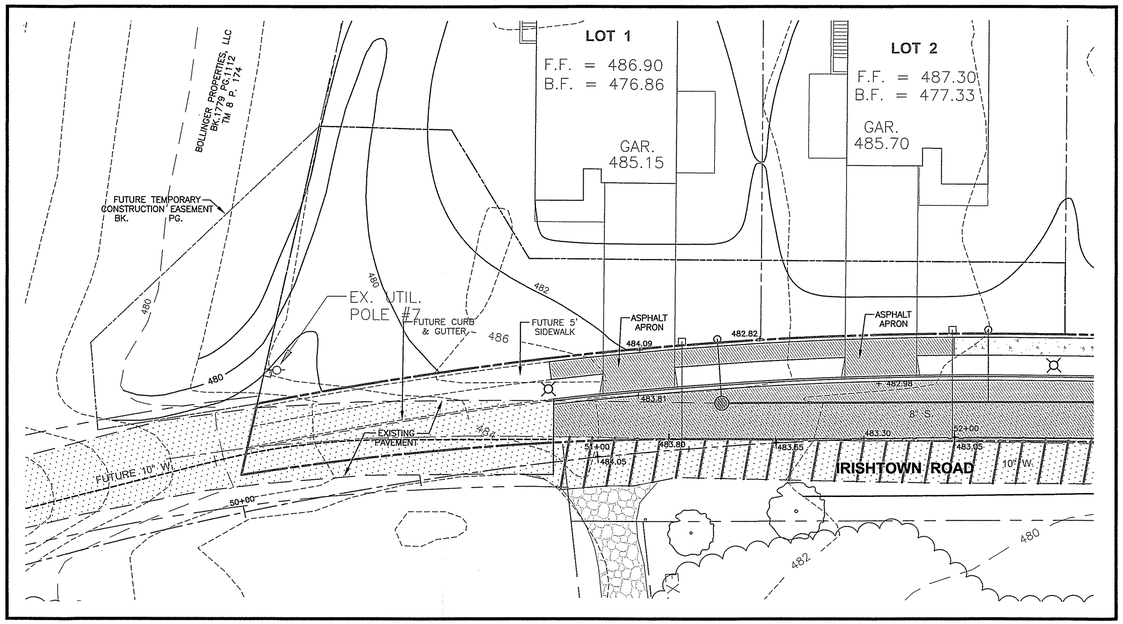

FUTURE GRADING DETAIL FOR LOT 1 TIE - OUT

SCALE : 1" = 20'

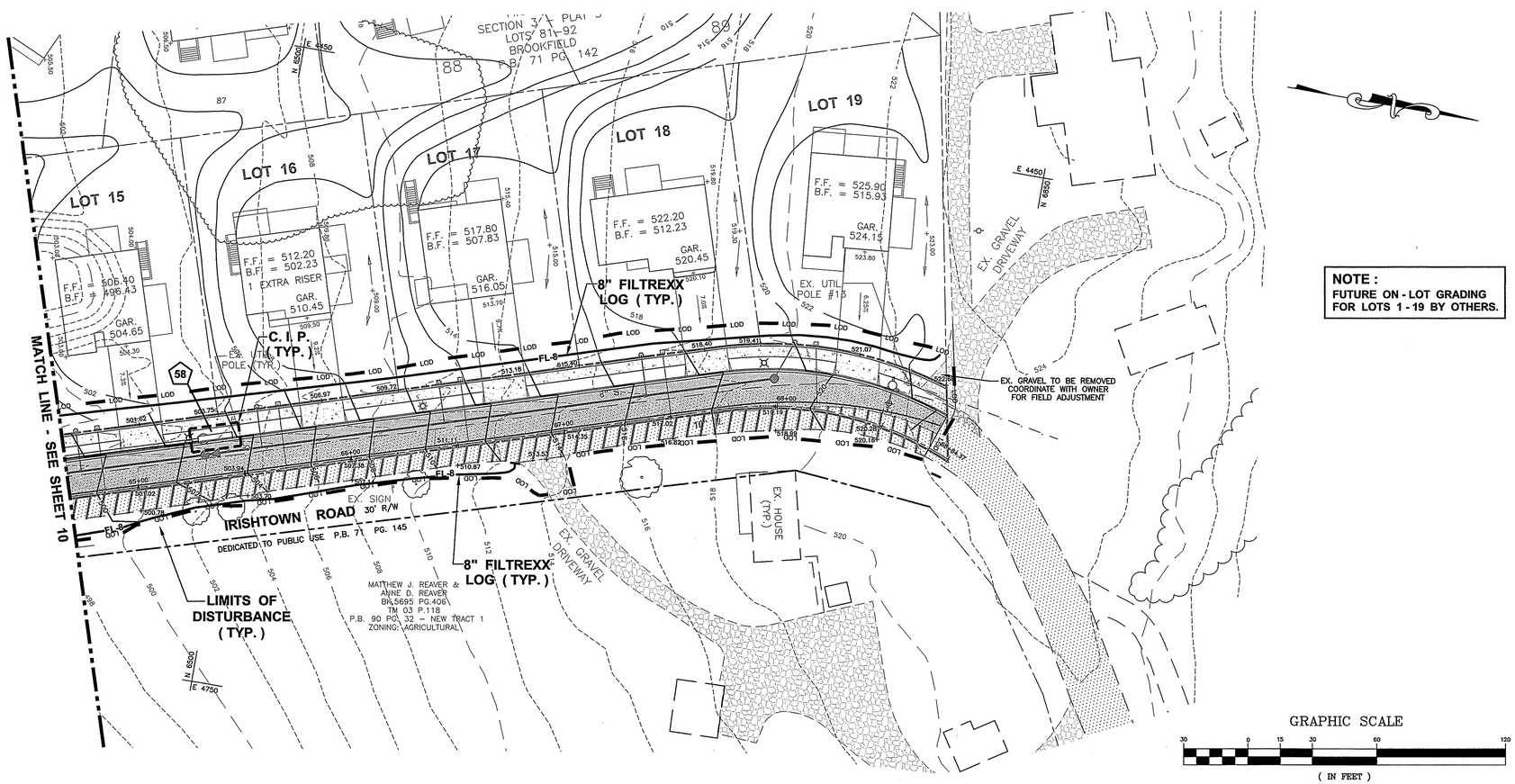

NOTE :
FUTURE ON - LOT GRADING FOR LOTS 1 - 19 BY OTHERS.

GRAPHIC SCALE

30 0 15 30 60 120

(IN FEET)
1 inch = 30 ft.

OWNERS / DEVELOPERS CERTIFICATION

I/WE HEREBY CERTIFY THAT ANY CLEARING, GRADING, CONSTRUCTION AND/OR DEVELOPMENT WILL BE DONE PURSUANT TO THIS PLAN AND THAT ANY RESPONSIBLE PERSONNEL INVOLVED IN THE CONSTRUCTION PROJECT WILL HAVE A CERTIFICATE OF ATTENDANCE AT A DEPARTMENT OF THE ENVIRONMENT APPROVED TRAINING PROGRAM FOR THE CONTROL OF SEDIMENT AND EROSION BEFORE BEGINNING THE PROJECT.

OWNER / DEVELOPER DATE

FREDERICK SOIL CONSERVATION DISTRICT SOIL EROSION AND SEDIMENT CONTROL PLAN APPROVAL

By: _____

Date: _____

SCD APPROVAL FOR SEDIMENT AND EROSION CONTROL IS CONTINGENT UPON ISSUANCE OF ALL APPLICABLE REGULATORY PERMITS.

(PLAN IS VALID FOR TWO YEARS FROM DATE OF APPROVAL)

ENGINEER DESIGN CERTIFICATION

I HEREBY CERTIFY THIS PLAN FOR SOIL EROSION AND SEDIMENT CONTROL HAS BEEN DESIGNED IN ACCORDANCE WITH LOCAL ORDINANCES, COMAR 26.17.01, 26.17.02 AND THE 2011 MARYLAND STANDARDS AND SPECIFICATIONS FOR SOIL EROSION AND SEDIMENT CONTROL.

JOSEPH H. CECI 3/22/21
REG. NO. 30709 DATE

FOX & ASSOCIATES INC.
Est. 1966

FOX & ASSOCIATES, INC.
ENGINEERS • SURVEYORS • PLANNERS
981 MT. AETNA ROAD
HAGERSTOWN, MD. 21740
PHONE: (301)733-8503
or (301)416-7250
FAX: (301)733-1853
82 WORMANS MILL COURT
SUITE 'G'
FREDERICK, MD. 21701
PHONE: (301)695-0860
FAX: (301)293-6009
WWW.FOXASSOCIATESINC.COM Email: FOXFREDERICK@FOXASSOCIATESINC.COM

DATE	REVISION	DRAWN BY
11/2020	REVISED PER TOWN OF EMMITSBURG COMMENTS	

GRADING, STORM DRAIN AND SEDIMENT CONTROL PLAN

IRISHTOWN ROAD

SITUATED ON THE WEST SIDE OF IRISHTOWN ROAD
TOWN OF EMMITSBURG, ELECTION DISTRICT No. 5
FREDERICK COUNTY, MARYLAND

SCALE: AS SHOWN

PROFESSIONAL CERTIFICATION

STATE OF MARYLAND JOSEPH H. CECI No. 30709 PROFESSIONAL ENGINEER
3/22/21

I HEREBY CERTIFY THAT THESE DOCUMENTS WERE PREPARED OR APPROVED BY ME, AND THAT I AM A DULY LICENSED PROFESSIONAL ENGINEER UNDER THE LAWS OF THE STATE OF MARYLAND.

LICENSE No.: 30709 EXP. DATE: 7/23/22

PROJECT NO.	18-50891
DRAWING NO.	D - 3501
DATE:	AUGUST 2020
DRAWN BY:	JWE
CHECKED BY:	JEM

SHEET 11 OF 15

H:\CARLSON PROJECTS\18\50891 HIGHLAND DEVELOPMENT CORP\WD-01.DWG, 3/22/2021 11:12:30 AM, BOCKNSON, 1:1

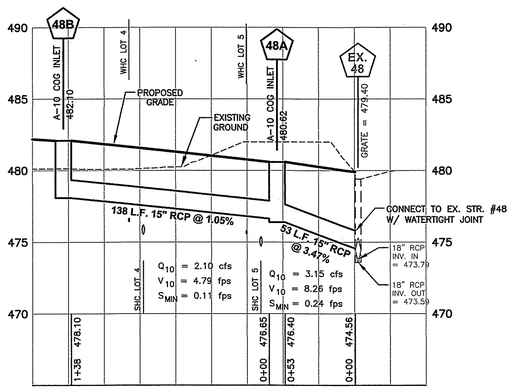

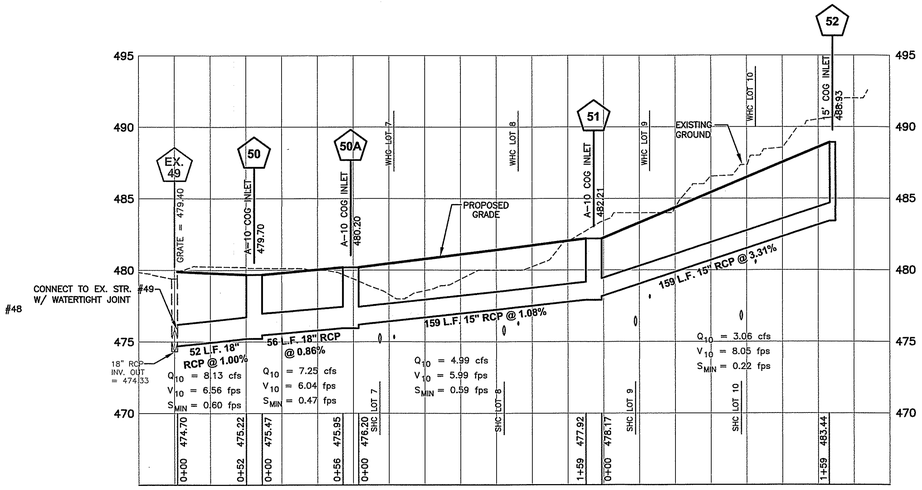

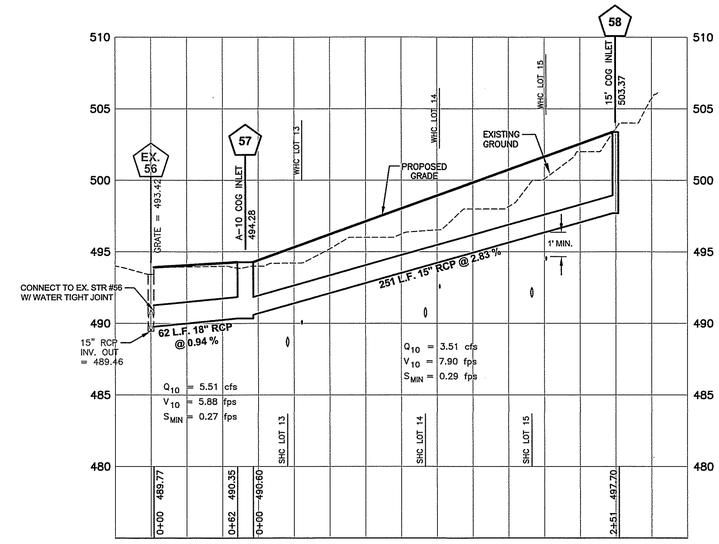

PROFILE SCALES

HORIZ. – 1" = 50'
VERT. – 1" = 5'

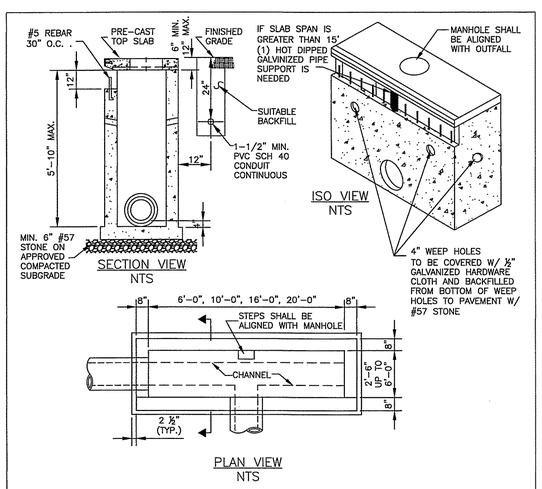

NOTES:

1. INLET FOR USE WHEN LESS THAN 6' FROM TOP SLAB TO LOW PIPE INVERT.
2. CONCRETE STRENGTH 4500 PSI– MIX NO. 6.
3. TOP SLAB TO BE ADJUSTED TO GRADE IN FIELD AND PRIOR TO CURB PLACEMENT.
4. STEPS TO BE ALIGNED VERTICALLY @ 15" O.C.
5. PIPE OPENINGS TO BE LOCATED AS REQUIRED.
6. JOINT PROVIDED WHEN RISERS ARE REQ. ALL JOINTS TO BE GROUTED W/ NON–SHRINK GROUT INSIDE AND OUT.
7. INVERT CHANNEL TO BE INSTALLED IN FIELD.
8. PIPE SUPPORTS AND GUTTER TO BE SUPPLIED AND INSTALLED.

TYPE 'A' COG INLET
NOT TO SCALE

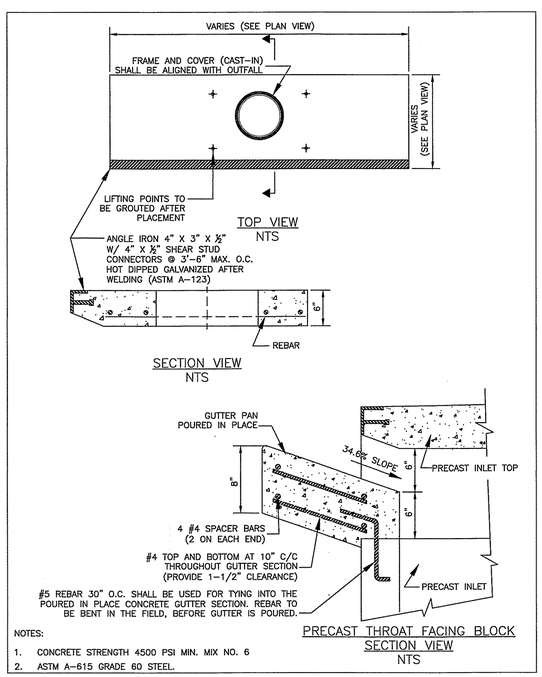

NOTES:

1. CONCRETE STRENGTH 4500 PSI MIN. MIX NO. 6
2. ASTM A–615 GRADE 60 STEEL.

TYPE 'A' COG INLET
NOT TO SCALE

STRUCTURE SCHEDULE

No.	TYPE	℄ STATION	℄ OFFSET	ELEVATION	REMARKS
48A	10' TYPE 'A' COG INLET	U 54+59.77	17'L	480.72 (TOP)	SEE DETAIL THIS SHEET
		L 54+70.84	17'L	480.61 (TOP)	
48B	10' TYPE 'A' COG INLET	U 53+10.08	17'L	482.22 (TOP)	SEE DETAIL THIS SHEET
		L 53+21.08	17'L	482.11 (TOP)	
50	10' TYPE 'A' COG INLET	U 55+86.54	17'L	479.70 (TOP)	SEE DETAIL THIS SHEET
		L 55+75.54	17'L	479.70 (TOP)	
50A	10' TYPE 'A' COG INLET	U 56+54.03	17'L	480.26 (TOP)	SEE DETAIL THIS SHEET
		L 56+43.03	17'L	480.15 (TOP)	
51	10' TYPE 'A' COG INLET	U 58+24.03	17'L	482.36 (TOP)	SEE DETAIL THIS SHEET
		L 58+13.03	17'L	482.12 (TOP)	
52	15' COG INLET	U 59+99.03	17'L	489.25 (TOP)	MSHA STD. MD - 374.62
		L 59+83.03	17'L	488.61 (TOP)	
57	10' TYPE 'A' COG INLET	U 62+79.55	17'L	494.37 (TOP)	SEE DETAIL THIS SHEET
		L 62+68.55	17'L	494.26 (TOP)	
58	15' COG INLET	U 65+46.37	17'L	503.86 (TOP)	MSHA STD. MD - 374.62
		L 65+30.37	17'L	502.88 (TOP)	

* ELEV. GIVEN TO TOP OF CURB ** ℄/L STA. GIVEN TO ℄/L OF STRUCTURE *** ℄/L OFFSET GIVEN TO FACE OF CURB AT STRUCTURE

PIPE SCHEDULE

SIZE	TYPE	CLASS	LENGTH
15"	RCP	IV	760
18"	RCP	IV	170

FOX & ASSOCIATES INC.
Est. 1966

FOX & ASSOCIATES, INC.
ENGINEERS • SURVEYORS • PLANNERS
981 MT. AETNA ROAD
HAGERSTOWN, MD. 21740
PHONE: (301)733-8503
or (301)416-7250
FAX: (301)733-1853
82 WORMANS MILL COURT
SUITE 'G'
FREDERICK, MD. 21701
PHONE: (301)695-0880
FAX: (301)293-6009
WWW.FOXASSOCIATESINC.COM Email: FOXFREDERICK@FOXASSOCIATESINC.COM

DATE	REVISION	DRAWN BY
11/2020	REVISED PER TOWN OF EMMITSBURG COMMENTS	

STORM DRAIN PROFILES
IRISHTOWN ROAD
SITUATED ON THE WEST SIDE OF IRISHTOWN ROAD
TOWN OF EMMITSBURG, ELECTION DISTRICT No. 5
FREDERICK COUNTY, MARYLAND

SCALE: AS SHOWN

PROFESSIONAL CERTIFICATION

STATE OF MARYLAND JOSEPH H. CECH PROFESSIONAL ENGINEER No. 30709

3/22/21

I HEREBY CERTIFY THAT THESE DOCUMENTS WERE PREPARED OR APPROVED BY ME, AND THAT I AM A DULY LICENSED PROFESSIONAL ENGINEER UNDER THE LAWS OF THE STATE OF MARYLAND.

LICENSE No.: 30709 EXP. DATE: 7/23/22

PROJECT NO. 18-50891
DRAWING NO. D - 3501
DATE: AUGUST 2020
DRAWN BY: JWE
CHECKED BY: JEM

SHEET 12 OF 15

SEDIMENT CONTROL / STORMWATER MANAGEMENT REQUIRED INSPECTIONS

TYPE OF INSPECTION	DEVELOPER ENGINEER APPROVAL/DATE	EEA INSPECTION/ DATE
1) PRECONSTRUCTION MEETINGS		
2) COMPLETION OF SEDIMENT CONTROL MEASURES (IF USING BASIN SEE # 6 BELOW)		
3) PRIOR TO MODIFICATION OR REMOVAL OF SED. CNTRL.		
4) INFILTRATION SYSTEMS		
A. SITE READINESS PER SEQUENCE OF CONSTRUCTION		
B. INFILTRATION AREA PROTECTED FROM SEDIMENTATION		
C. DIMENSIONS		
D. FILTERING MATERIAL (TYPE/DEPTH)		
E. FILL MATERIAL		
F. SIZE, PLACEMENT, TYPE OF PIPING (IF APPLICABLE)		
G. OBSERVATION WELL		
H. COVER / STABILIZATION		
5) OPEN CHANNEL FLOW ATTENUATION		
A. SITE READINESS PER SEQUENCE OF CONSTRUCTION		
B. CROSS SECTION CONFORMANCE		
C. MATERIAL (TYPE/SIZE)		
D. STABILIZATION		
6) RETENTION / DETENTION STRUCTURES (BASIN/PONDS)		
A. SUBGRADE PREPARATION		
1. CORE TRENCH		
2. SUITABLE FILL		
3. COMPACTION		
B. EMBANKMENT CONSTRUCTION		
1. SUITABLE MATERIAL		
2. SLOPE GRADE		
C. BARREL AND RISER ASSEMBLY		
1. CORREOCT MATERIAL ONSITE		
2. SIZING		
3. ANTI-SEEP COLLARS		
4. INSTALLATION / BACKFILL		
D. CONCRETE INLET STRUCTURES		
1. FOOTER EXCAVATION AND SIZE		
2. REINFORCING MATERIAL (TYPE, SIZE, PLACEMENT)		
3. WEIR POUR		
4. FORM STRIP AND FINISHING		
E. IMPOUNDING AREA		
1. LOW FLOW CHANNELS		
2. DEWATERING DEVICE		
3. EMERGENCY SPILLWAY		
F. OUTFALL AREA (LEVEL SPREADER, RIPRAP CHANNEL, ETC.)		
G. VEGETATION STABILIZATION		
H. MISCELLANEOUS		

YOU MUST NOTIFY FREDERICK COUNTY ENVIRONMENTAL COMPLIANCE SECTION AT (301) 600-3507 BEFORE 9:00 AM 24 HOURS PRIOR TO THE REQUIRED INSPECTION. FAILURE TO NOTIFY THE AGENCY WILL RESULT IN A STOP WORK ORDER OR OTHER PENALTIES AS OUTLINED IN FREDERICK COUNTY CODES.

*****NOTICE*****

THIS LIST IS FOR SEQUENCE OF CONSTRUCTION ONLY. THE AGENCY ASSUMES NO RESPONSIBILITY OR LIABILITY FOR IMPROPER INSTALLATION OF ANY ITEM ON THIS CHECKLIST. THE AGENCY RECOMMENDS THAT A PROFESSIONAL ENGINEER BE PRESENT FOR EACH EACH OF THE REQUIRED INSPECTIONS.

NOTES

1. THE WETLANDS HAVE BEEN DELINEATED, AS SHOWN, BY McCARTHY & ASSOCIATES, INC. WETLAND DELINEATION REPORT DATED DECEMBER 2005. THE FIELD RECOVERED LIMITS ARE SHOWN ON THE PLAN.
2. FOX & ASSOCIATES, INC. HAS PREPARED A DETAILED 100 YEAR FLOODPLAIN STUDY. THE FLOODPLAIN SHOWN ON THE PLAN IS THE LIMITS OF THE DETAILED STUDY. THERE IS NO MAPPED 100 YEAR FLOODPLAIN ACCORDING TO THE FLOOD INSURANCE RATE MAP, PANEL NUMBER 240027 0175C.

FOR UTILITY WORK ONLY OR OFF-SITE UTILITY WORK

1. DISTURBANCE OUTSIDE OF LIMIT OF DISTURBED AREA CAN NOT EXCEED 5,000 SQUARE FEET.
2. PLACE ALL EXCAVATED MATERIAL ON HIGH SIDE OF TRENCH.
3. ONLY DO AS MUCH WORK AS CAN BE DONE IN ONE DAY SO BACKFILLING, FINAL GRADING, SEEDING AND MULCHING CAN OCCUR.
4. ANY SEDIMENT CONTROL MEASURES DISTURBED BY CONSTRUCTION WILL BE REPAIRED THE SAME DAY.

SECONDARY UTILITY NOTES

1. ALL DISTURBANCES FROM SECONDARY UTILITIES SUCH AS PHONE, CABLE, ELECTRIC CABLE, CABLE TV, ETC. WILL BE SUBCONTRACTORS RESPONSIBILITY TO BRING WORK AREA BACK TO GRADE LEVEL THAT WAS EXISTING AND SEED AND MULCH ANY DISTURBANCE FROM INSTALLATION OF LINES OR CONDUIT.
2. SUBCONTRACTORS WILL BE RESPONSIBLE FOR RE-INSTALLING OR REPAIRING ANY SILT FENCE OR SEDIMENT CONTROLS THAT WERE EXISTING TO MAINTAIN PROPER SEDIMENT CONTROL THAT MIGHT HAVE BEEN DAMAGED.

STOCKPILE NOTES

1. NO STOCKPILING ALLOWED ON ASPHALT.
2. ALL STOCKPILES LEFT AT THE END OF EACH WEEK NEED TO BE STABILIZED UNTIL THE NEXT REDISTURBANCE.

TEMPORARY SEEDING NOTES

GENERAL

1. SCOPE:
   PLANTING SHORT TERM VEGITATION TO STABILIZE CLEARED OR GRADED AREAS SUBJECT TO EROSION FOR A PERIOD OF 7 DAYS OR MORE.
2. STANDARDS
   TEMPORARY SEEDING SHALL CONFORM TO ALL REQUIREMENTS OF "2011 MARYLAND STANDARDS AND SPECIFICATIONS FOR SOIL EROSION AND SEDIMENT CONTROL" PUBLISHED JOINTLY BY WATER MANAGEMENT ADMINISTRATION, SOIL CONSERVATION SERVICE AND STATE SOIL CONSERVATION COMMITTEE.
3. SEDIMENT EROSION CONTROL:
   ALL PERIMETER CONTROLS MUST BE STABILIZED IN 3 DAYS; ALL INTERIOR CONTROLS MUST BE STABILIZED IN 7 DAYS.

SPECIFICATIONS

1. SITE PREPARATION
   A. PRIOR TO SEEDING, INSTALL ALL REQUIRED SEDIMENT EROSION CONTROL MEASURES.
   B. FINAL GRADING NOT REQUIRED FOR TEMPORARY SEEDING.
2. SOIL AMENDMENTS
   A. FERTILIZER SHALL BE APPLIED AT A RATE OF 600 LBS/ACRE USING 10-10-10 OR EQUIVALENT.
   B. ACID SOILS SHALL BE LIMED.
3. SEED PREPARATION
   A. SOIL SHALL BE LOOSENED TO A DEPTH OF 3-INCHES BY RAKING, DISCING OR OTHER ACCEPTABLE MEANS PRIOR TO SEEDING.
4. SEEDING
   A. SELECT A MIXTURE FROM TABLE B.1 IN THE STANDARD SPECIFICATIONS.
   B. APPLY SEED UNIFORMLY WITH A CYCLONE SEEDER, DRILL, CULTIPACKER SEEDER OR HYDROSEEDER.
5. MULCHING
   A. MULCH SHALL BE APPLIED IMMEDIATELY AFTER SEEDING. MULCH MATERIALS AND APPLICATIONS SHALL CONFORM TO THE STANDARD SPECIFICATIONS.

NOTE: ALL AREAS TO BE ROUGH GRADED AND/OR GRADED ONLY ARE TO BE STABILZED BY TEMPORARY SEEDING AND MULCHING WITHIN 7 DAYS AFTER GRADING IS COMPLETE, IF PERMANENT SEEDING CANNOT BE PERFORMED AT THAT TIME. THESE AREAS SHALL BE STABILIZED WITH PERMANENT SEEDING AND MULCHING AT THE BEGINNING OF THE NEXT GROWING SEASON.

TEMPORARY SEEDING SUMMARY

SEED MIXTURE (HARDINESS ZONE 6B) FROM TABLE B.1					FERTILIZER RATE (10-10-10)	LIME RATE
No.	SPECIES	APPLICATION RATE (LB/AC)	SEEDING DATES	SEEDING DEPTHS		
1	* BARLEY	96 (2.2 LBS/ 1000 S.F.)	3/15 - 5/31 8/1 - 9/30	1*	436 LBS./AC. (10 LBS/1000 S.F.)	2 TONS/AC. (90 LBS/1000 S.F.)

* OR LIKE SPECIES WITH APPROVAL FROM FREDERICK & CATOCTIN S.C.D.

PERMANENT SEEDING & SOD NOTES

GENERAL

1. SCOPE: PLANTING PERMANENT, LONG-LIVED VEGATATIVE COVER ON GRADED OR CLEARED AREAS.
2. STANDARDS: PERMANENT SEEDING SHALL CONFORM TO ALL REQUIREMENTS OF "2011 MARYLAND STANDARDS AND SPECIFICATIONS FOR SOIL EROSION AND SEDIMENT CONTROL" PUBLISHED JOINTLY BY WATER MANAGEMENT ADMINISTRATION, SOIL CONSERVATION SERVICE AND STATE SOIL CONSERVATION COMMITTEE.

SPECIFICATIONS

1. SITE PREPARATION
   A. PRIOR TO SEEDING, INSTALL ALL REQUIRED SEDIMENT EROSION CONTROL MEASURES.
   B. FINAL GRADING REQUIRED FOR PERMANENT SEEDING.
2. SOIL AMENDMENTS
   A. FERTILIZER SHALL BE APPLIED AT A RATE OF 600 LBS/ACRE USING 10-10-10 OR EQUIVALENT.
3. SEEDBED PREPARATION
   A. SOIL SHALL BE LOOSENED TO A DEPTH OF 3-INCHES BY RAKING, DISCING OR OTHER ACCEPTABLE MEANS PRIOR TO SEEDING.
4. SEEDING
   A. SELECT A MIXTURE FROM TABLE B.2 & B.3 IN THE STANDARD SPECIFICATIONS.
   B. APPLY SEED UNIFORMLY WITH A CYCLONE SEEDER, DRILL, CULTIPACKER SEEDER OR HYDROSEEDER (SLURRY INCLUDES SEED AND FERTILIZER ON A FIRM, MOIST SEEDBED). MAXIMUM SEEDING DEPTH SHOULD BE ¼ INCH ON CLAYEY SOILS AND ½ INCH ON SANDY SOILS, WHEN USING OTHER THAN HYDROSEEDER METHOD OF APPLICATION. NOTE: IF HYDROSEEDING IS USED AND SEED AND FERTILIZER IS MIXED, THEY WILL BE MIXED ON SITE AND THE SEEDING SHALL BE IMMEDIATE WITHOUT INTERUPTION.

PERMANENT STABILIZATION WITH SOD

1. ALL SPECIFICATIONS, SITE PREPARATION, INSTALLATION AND MAINTENANCE OF SOD FOR PERMANENT, LONG-LIVED VEGATATIVE COVER SHALL CONFORM TO SECTION B OF THE "2011 MARYLAND STANDARDS AND SPECIFICATIONS FOR SOIL EROSION AND SEDIMENT CONTROL" PUBLISHED JOINTLY BY WATER MANAGEMENT ADMINISTRATION, SOIL CONSERVATION SERVICE AND STATE SOIL CONSERVATION COMMITTEE.

NOTE: ALL AREAS TO BE ROUGH GRADED AND/OR GRADED ONLY ARE TO BE STABILIZED BY PERMANENT SEEDING AND MULCHING WITHIN 7 DAYS AFTER GRADING IS COMPLETE (SEE TEMPORARY SEEDING NOTES)

PERMANENT SEEDING SUMMARY

SEED MIXTURE (HARDINESS ZONE 6B) FROM TABLE B.3					FERTILIZER RATE (10-20-20)			LIME RATE
No.	SPECIES	APPLICATION RATE (LB/AC)	SEEDING DATES	SEEDING DEPTHS	N	P205	K20	
6	TALL FESCUE PERENNIAL RYEGRASS WHITE CLOVER	40 25 5	3/1 - 5/15 8/1 - 10/15	1/4" - 1/2"	45 LB/AC (1.0 LB/ 1000 S.F.)	90 LB/AC (2 LB/ 1000 S.F.)	90 LB/AC (2 LB/ 1000 S.F.)	2 TONS/AC (90 LB/ 1000 S.F.)

SEDIMENT & EROSION CONTROL NOTES

1. ALL SOIL EROSION/SEDIMENT CONTROL MEASURES SHALL COMPLY WITH THE "2011 MARYLAND STANDARDS AND SPECIFICATIONS FOR SOIL EROSION AND SEDIMENT CONTROL" AND THE PROVISIONS OF THE APPROVED PLAN.
2. ALL GRADING AND STABILIZATION SHALL COMPLY WITH THE "2011 MARYLAND STANDARDS AND SPECIFICATIONS FOR SOIL EROSION AND SEDIMENT CONTROL, SECTION B - GRADING AND STABILIZATION" AND THE PROVISIONS OF THE APPROVED PLAN.
3. ALL SOIL EROSION AND SEDIMENT CONTROL PRACTICES (BMP'S) ARE TO BE CONSTRUCTED AND/OR INSTALLED PRIOR TO OR AT THE INITIATION OF GRADING IN ACCORDANCE WITH "2011 MARYLAND STANDARDS AND SPECIFICATIONS FOR SOIL EROSION AND SEDIMENT CONTROL", AND THE APPROVED PLAN.
4. A GRADING UNIT IS THE MAXIMUM CONTIGUOUS AREA ALLOWED TO BE GRADED AT A GIVEN TIME AND IS LIMITED TO 20 ACRES. WORK MAY PROCEED TO A SUBSEQUENT GRADING UNIT WHEN AT LEAST 50 PERCENT OF THE DISTURBED AREA IN THE PRECEDING GRADING UNIT HAS BEEN STABILIZED AND APPROVED BY THE ENFORCEMENT AUTHORITY AND/OR THE LOCAL SOIL CONSERVATION DISTRICT (APPROVAL AUTHORITY) UNLESS OTHERWISE SPECIFIED AND APPROVED BY THE APPROVAL AUTHORITY, NO MORE THAN 30 ACRES CUMULATIVELY MAY BE DISTURBED AT A GIVEN TIME.
5. FOR INITIAL SOIL DISTURBANCE OR RE-DISTURBANCE, TEMPORARY OR PERMANENT STABILIZATION MUST BE COMPLETED WITHIN:
   A. THREE (3) CALENDAR DAYS AS TO THE SURFACE OF ALL PERIMETER DIKES, SWALES, DITCHES, PERIMETER SLOPES, AND ALL SLOPES STEEPER THAN 3 HORIZONTAL TO 1 VERTICAL (3:1); AND
   B. SEVEN (7) CALENDAR DAYS AS TO ALL OTHER DISTURBED OR GRADED AREAS ON THE PROJECT SITE NOT UNDER ACTIVE GRADING.
6. STOCKPILES MUST BE STABILIZED IN ACCORDANCE WITH THE 7 DAY STABILIZATION REQUIREMENT, AS WELL AS, STANDARD B-4-1 INCREMENTAL STABILIZATION AND STANDARD B-4-4 TEMPORARY STABILIZATION (AS APPLICABLE).
7. ALL CONSTRUCTED CHANNELS AND SWALES SHALL HAVE SPECIFIED TREATMENT INSTALLED TO THE DESIGN FLOW DEPTH COMPLETED DOWNSTREAM TO UPSTREAM AS CONSTRUCTION PROGRESSES. AN INSTALLATION DETAIL SHALL BE SHOWN ON THE PLANS.
8. ALL STORM DRAIN AND SANITARY SEWER LINES NOT IN PAVED AREAS ARE TO BE SEEDED AND MULCHED WITHIN 3 DAYS OF INITIAL BACKFILL UNLESS OTHERWISE SPECIFIED ON PLANS.
9. ELECTRIC POWER, TELEPHONE, AND GAS LINES ARE TO BE COMPACTED, SEEDED, AND MULCHED WITHIN 3 DAYS AFTER INITIAL BACKFILL UNLESS OTHERWISE SPECIFIED ON PLANS.
10. NO SLOPE SHALL BE GREATER THAN 2:1.
11. DURING CONSTRUCTION, ALL SEDIMENT CONTROL STRUCTURES WILL BE INSPECTED AFTER EACH RAINFALL AND REPAIRED IF NECESSARY. SEDIMENT TO BE REMOVED TO A SUITABLE DISPOSAL AREA AND STABILIZED WITH PERMANENT VEGETATIVE COVER.
12. CONTRACTOR IS RESPONSIBLE FOR MAINTAINING ALL SEDIMENT AND EROSION CONTROL MEASURES UNTIL DISTURBED AREAS ARE STABILIZED.
13. AFTER FINE GRADING, ALL DISTURBED AREAS ARE TO BE PERMANENTLY SEEDED AND MULCHED IN ACCORDANCE WITH PERMANENT SEEDING SUMMARY.
14. ALL SPOIL AND/OR BORROW MUST COME FROM AND GO TO A SITE WITH AN APPROVED EROSION AND SEDIMENT CONTROL PLAN.
15. CONTRACTOR TO ONLY OPEN UP LENGTH OF TRENCH THAT CAN BE CONSTRUCTED AND BACKFILLED IN ONE WORKING DAY IN PAVED AREAS.
16. IN AREAS WHERE THE CONSTRUCTION TAKES PLACE OUTSIDE OF THE EXISTING ROADBED, CONTRACTOR TO INSTALL SILT FENCE ALONG THE DOWNHILL SIDE OF THE TRENCH BEFORE BEGINNING CONSTRUCTION AND PLACE EXCAVATED MATERIAL FROM THE TRENCH ON THE UPHILL SIDE.
17. IF DEWATERING OF THE TRENCH IS REQUIRED, CONTRACTOR TO PUMP WATER TO A FILTER BAG TO DEWATER.
18. CONTRACTOR TO SWEEP STREETS OF ANY DEBRIS OR SEDIMENTS CAUSED BY CONSTRUCTION OPERATIONS AND DISPOSE OF AT AN APPROVED LOCATION.
19. CONTRACTOR TO STABILIZE ALL DISTURBED AREAS WITH SEED & MULCH OR APPROPRIATE STREET REPAIR.

FOR SITES 1.0 ACRE OR MORE, THE FOLLOWING ARE REQUIRED:

A. MARYLAND DEPARTMENT OF THE ENVIRONMENT, GENERAL PERMIT FOR STORMWATER ASSOCIATED WITH A CONSTRUCTION ACTIVITY, NPDES PERMIT NUMBER MDR10, STATE DISCHARGE PERMIT NUMBER 09GP, OR AN INDIVIDUAL PERMIT.

B. THE MARYLAND DEPARTMENT OF THE ENVIRONMENT (GENERAL/INDIVIDUAL PERMIT-NOTICE OF INTENT-NOI) APPLICATION AND PERMIT SHALL BE POSTED AND/OR AVAILABLE ON-SITE AT ALL TIMES.

C. DURING CONSTRUCTION, ALL SOIL EROSION AND SEDIMENT CONTROL PRACTICES (BMP'S) SHALL BE INSPECTED AND RECORDED ON THE "STANDARD INSPECTION FORM", "GENERAL PERMIT FOR STORMWATER ASSOCIATED WITH CONSTRUCTION ACTIVITY" PER THE MARYLAND DEPARTMENT OF THE ENVIRONMENT (GENERAL/INDIVIDUAL PERMIT-NOTICE OF INTENT-NOI).

D. FOLLOWING CONSTRUCTION AND RELEASE OF THE SIGHT FOR SOIL EROSION AND SEDIMENT CONTROL BY THE SEDIMENT CONTROL INSPECTOR I.E., ALL PORTIONS OF A SITE HAVE BEEN PERMANENTLY STABILIZED, AND ALL STORMWATER DISCHARGES FROM CONSTRUCTION SITES THAT ARE AUTHORIZED BY THE PERMIT ARE ELIMINATED, THE AUTHORIZED PERMITTEE SHALL SUBMIT THE MARYLAND DEPARTMENT OF THE ENVIRONMENT, GENERAL/INDIVIDUAL PERMIT-NOTICE OF TERMINATION (NOT).

DETAIL H-6 ONSITE CONCRETE WASHOUT STRUCTURE

STANDARD SYMBOL CWS

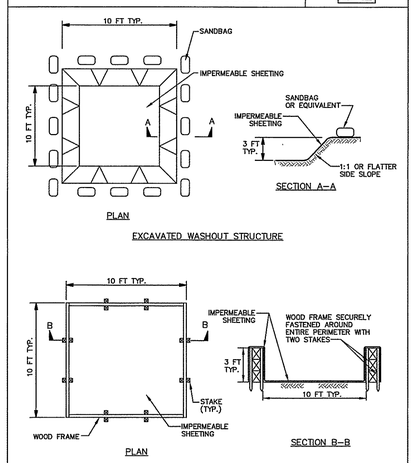

1 OF 2

MARYLAND STANDARDS AND SPECIFICATIONS FOR SOIL EROSION AND SEDIMENT CONTROL

U.S. DEPARTMENT OF AGRICULTURE NATURAL RESOURCES CONSERVATION SERVICE	2011	MARYLAND DEPARTMENT OF ENVIRONMENT WATER MANAGEMENT ADMINISTRATION

DETAIL H-6 ONSITE CONCRETE WASHOUT STRUCTURE

STANDARD SYMBOL CWS

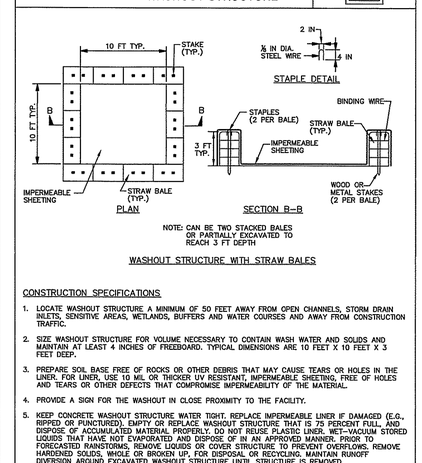

CONSTRUCTION SPECIFICATIONS

1. LOCATE WASHOUT STRUCTURE A MINIMUM OF 50 FEET AWAY FROM OPEN CHANNELS, STORM DRAIN INLETS, SENSITIVE AREAS, WETLANDS, BUFFERS AND WATER COURSES AND AWAY FROM CONSTRUCTION TRAFFIC.
2. SIZE WASHOUT STRUCTURE FOR VOLUME NECESSARY TO CONTAIN WASH WATER AND SOLIDS AND MAINTAIN AT LEAST 4 INCHES OF FREEBOARD. TYPICAL DIMENSIONS ARE 10 FEET X 10 FEET X 3 FEET DEEP.
3. PREPARE SOIL BASE FREE OF ROCKS OR OTHER DEBRIS THAT MAY CAUSE TEARS OR HOLES IN THE LINER. FOR LINER, USE 10 MIL OR THICKER UV RESISTANT, IMPERMEABLE SHEETING, FREE OF HOLES AND TEARS OR OTHER DEFECTS THAT COMPROMISE IMPERMEABILITY OF THE MATERIAL.
4. PROVIDE A SIGN FOR THE WASHOUT IN CLOSE PROXIMITY TO THE FACILITY.
5. KEEP CONCRETE WASHOUT STRUCTURE WATER TIGHT. REPLACE IMPERMEABLE LINER IF DAMAGED (E.G., RIPPED OR PUNCTURED). EMPTY OR REPLACE WASHOUT STRUCTURE THAT IS 75 PERCENT FULL, AND DISPOSE OF ACCUMULATED MATERIAL PROPERLY. DO NOT REUSE PLASTIC LINER. WET-VACUUM STORED LIQUIDS THAT HAVE NOT EVAPORATED AND DISPOSE OF IN AN APPROVED MANNER. PRIOR TO FORECASTED RAINSTORMS, REMOVE LIQUIDS OR COVER STRUCTURE TO PREVENT OVERFLOWS. REMOVE HARDENED SOLIDS, WHOLE OR BROKEN UP, FOR DISPOSAL OR RECYCLING. MAINTAIN RUNOFF DIVERSION AROUND EXCAVATED WASHOUT STRUCTURE UNTIL STRUCTURE IS REMOVED.

2 OF 2

MARYLAND STANDARDS AND SPECIFICATIONS FOR SOIL EROSION AND SEDIMENT CONTROL

U.S. DEPARTMENT OF AGRICULTURE NATURAL RESOURCES CONSERVATION SERVICE	2011	MARYLAND DEPARTMENT OF ENVIRONMENT WATER MANAGEMENT ADMINISTRATION

SEQUENCE OF CONSTRUCTION

1. OBTAIN ALL REQUIRED PERMITS AND APPROVALS FROM THE APPROPRIATE AGENCIES. CONTRACTOR SHALL CONTACT MISS UTILITY AT 800-257-7777, FREDERICK COUNTY ENVIRONMENTAL COMPLIANCE SECTION AT 301-600-3507 TO SET UP A PRE-CONSTRUCTION MEETING AT LEAST 48 HOURS PRIOR TO BEGINNING CONSTRUCTION. THE LIMITS OF DISTURBANCE SHALL BE STAKED IN THE FIELD PRIOR TO THE PRE-CONSTRUCTION MEETING. STOCKPILE AND STAGING AREA TO BE DISCUSSED IN THE FIELD. ADDITIONAL SEDIMENT CONTROL MEASURES MAY BE REQUIRED AS A RESULT OF THE PRE-CONSTRUCTION MEETING. A COPY OF THE NOTICE OF INTENT WILL NEED TO BE RECEIVED FROM MDE PRIOR TO THE START OF CONSTRUCTION.
2. INSTALL/MAINTAIN STABILIZED CONSTRUCTION ENTRANCES AND PERIMETER CONTROLS AT LOCATIONS SHOWN ON PLANS. SEDIMENT AND EROSION CONTROL MEASURES MUST BE INSTALLED PRIOR TO EXCAVATION. STOCKPILE LOCATIONS WILL BE DETERMINED IN THE FIELD AS NEEDED AND WILL BE LOCATED WITH A PERMITTED AREA. CONTACT FREDERICK COUNTY DEPARTMENT OF ENVIRONMENTAL COMPLIANCE ONCE PERIMETER CONTROLS ARE IN PLACE.
3. STABILIZATION SHALL BE COMPLETED IN ACCORDANCE WITH THE SEDIMENT CONTROL NOTES FOUND ON THESE PLANS. CONTRACTOR WILL BE RESPONSIBLE FOR PROVIDING ADDITIONAL SEDIMENT AND EROSION CONTROL MEASURES AS NECESSARY AT THE INSPECTOR'S DISCRETION.
4. PER DETOUR PLAN, INSTALL INTERSECTION AT BROOKFIELD DRIVE AND IRISHTOWN ROAD TO ALL TRAFFIC TO DETOUR AROUND THE PROJECT AREA.
5. ONCE ROADWAYS ARE BROUGHT TO SUBGRADE BEGIN UTILITY INSTALLATION. EXCAVATE ONLY THAT AMOUNT OF TRENCH WHICH CAN BE EXCAVATED AND BACKFILLED EACH WORKING DAY. INSTALL STORM DRAIN WITH OUTLET PROTECTION. INSTALL INLET PROTECTION AS STRUCTURES ARE BROUGHT TO GRADE, CONSTRUCT DRAINAGE DITCHES FROM DOWNSTREAM TO UPSTREAM. STABILIZE ALL DITCHES AS THEY ARE CONSTRUCTED AND MAINTAIN POSITIVE DRAINAGE AT ALL TIME.
6. INSTALL CURB AND BEGIN PAVING OPERATIONS. INSTALL DRY UTILITIES. FINAL GRADE AND STABILIZE.
7. UPON APPROVAL FROM THE SEDIMENT CONTROL INSPECTOR. REMOVE SEDIMENT CONTROL DEVICES AND STABILIZE AREAS DISTURBED BY THEIR REMOVAL.

ENGINEER DESIGN CERTIFICATION

I HEREBY CERTIFY THIS PLAN FOR SOIL EROSION AND SEDIMENT CONTROL HAS BEEN DESIGNED IN ACCORDANCE WITH LOCAL ORDINANCES, COMAR 26.17.01, 26.17.02 AND THE 2011 MARYLAND STANDARDS AND SPECIFICATIONS FOR SOIL EROSION AND SEDIMENT CONTROL.

JOSEPH H. CECI — REG. NO. 30709 — DATE 3/22/21

FREDERICK SOIL CONSERVATION DISTRICT SOIL EROSION AND SEDIMENT CONTROL PLAN APPROVAL

By: _____

Date: _____

SCD APPROVAL FOR SEDIMENT AND EROSION CONTROL IS CONTINGENT UPON ISSUANCE OF ALL APPLICABLE REGULATORY PERMITS.

(PLAN IS VALID FOR TWO YEARS FROM DATE OF APPROVAL)

OWNERS / DEVELOPERS CERTIFICATION

I/WE HEREBY CERTIFY THAT ANY CLEARING, GRADING, CONSTRUCTION AND/OR DEVELOPMENT WILL BE DONE PURSUANT TO THIS PLAN AND THAT ANY RESPONSIBLE PERSONNEL INVOLVED IN THE CONSTRUCTION PROJECT WILL HAVE A CERTIFICATE OF ATTENDANCE AT A DEPARTMENT OF THE ENVIRONMENT APPROVED TRAINING PROGRAM FOR THE CONTROL OF SEDIMENT AND EROSION BEFORE BEGINNING THE PROJECT.

OWNER / DEVELOPER — DATE

FOX & ASSOCIATES INC. Est. 1966

FOX & ASSOCIATES, INC.
ENGINEERS • SURVEYORS • PLANNERS
981 MT. AETNA ROAD — 82 WORMANS MILL COURT
HAGERSTOWN, MD. 21740 — SUITE E
PHONE: (301)733-8503 — FREDERICK, MD. 21701
FAX: (301)416-7256 — PHONE: (301)695-0880
FAX: (301)293-6009
WWW.FOXASSOCIATESINC.COM Email: FOXFREDERICK@FOXASSOCIATESINC.COM

DATE	REVISION	DRAWN BY
11/2020	REVISED PER TOWN OF EMMITSBURG COMMENTS	

SEDIMENT CONTROL NOTES AND DETAILS

IRISHTOWN ROAD

SITUATED ON THE WEST SIDE OF IRISHTOWN ROAD
TOWN OF EMMITSBURG, ELECTION DISTRICT No. 5
FREDERICK COUNTY, MARYLAND

SCALE: AS SHOWN

PROFESSIONAL CERTIFICATION

STATE OF MARYLAND — JOSEPH H. CECI — No. 30709 — PROFESSIONAL ENGINEER — 3/22/21

I HEREBY CERTIFY THAT THESE DOCUMENTS WERE PREPARED OR APPROVED BY ME, AND THAT I AM A DULY LICENSED PROFESSIONAL ENGINEER UNDER THE LAWS OF THE STATE OF MARYLAND.

LICENSE No.: 30709 EXP. DATE: 7/23/22

PROJECT NO. 18-50891
DRAWING NO. D - 3501
DATE: AUGUST 2020
DRAWN BY: JWE
CHECKED BY: JEM

SHEET 13 OF 15

DETAIL B-1 STABILIZED CONSTRUCTION ENTRANCE

STANDARD SYMBOL SCE

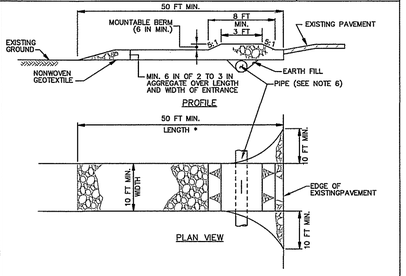

CONSTRUCTION SPECIFICATIONS

1. PLACE STABILIZED CONSTRUCTION ENTRANCE IN ACCORDANCE WITH THE APPROVED PLAN. VEHICLES MUST TRAVEL OVER THE ENTIRE LENGTH OF THE SCE. USE MINIMUM LENGTH OF 50 FEET (*30 FEET FOR SINGLE RESIDENCE LOT). USE MINIMUM WIDTH OF 10 FEET. FLARE SCE 10 FEET MINIMUM AT THE EXISTING ROAD TO PROVIDE A TURNING RADIUS.
2. PIPE ALL SURFACE WATER FLOWING TO OR DIVERTED TOWARD THE SCE UNDER THE ENTRANCE, MAINTAINING POSITIVE DRAINAGE. PROTECT PIPE INSTALLED THROUGH THE SCE WITH A MOUNTABLE BERM WITH 5:1 SLOPES AND A MINIMUM OF 12 INCHES OF STONE OVER THE PIPE. PROVIDE PIPE AS SPECIFIED ON APPROVED PLAN. WHEN THE SCE IS LOCATED AT A HIGH SPOT AND HAS NO DRAINAGE TO CONVEY, A PIPE IS NOT NECESSARY. A MOUNTABLE BERM IS REQUIRED WHEN SCE IS NOT LOCATED AT A HIGH SPOT.
3. PREPARE SUBGRADE AND PLACE NONWOVEN GEOTEXTILE, AS SPECIFIED IN SECTION H-1 MATERIALS.
4. PLACE CRUSHED AGGREGATE (2 TO 3 INCHES IN SIZE) OR EQUIVALENT RECYCLED CONCRETE (WITHOUT REBAR) AT LEAST 6 INCHES DEEP OVER THE LENGTH AND WIDTH OF THE SCE.
5. MAINTAIN ENTRANCE IN A CONDITION THAT MINIMIZES TRACKING OF SEDIMENT. ADD STONE OR MAKE OTHER REPAIRS AS CONDITIONS DEMAND TO MAINTAIN CLEAN SURFACE, MOUNTABLE BERM, AND SPECIFIED DIMENSIONS. IMMEDIATELY REMOVE STONE AND/OR SEDIMENT SPILLED, DROPPED, OR TRACKED ONTO ADJACENT ROADWAY BY VACUUMING, SCRAPING, AND/OR SWEEPING. WASHING ROADWAY TO REMOVE MUD TRACKED ONTO PAVEMENT IS NOT ACCEPTABLE UNLESS WASH WATER IS DIRECTED TO AN APPROVED SEDIMENT CONTROL PRACTICE.

MARYLAND STANDARDS AND SPECIFICATIONS FOR SOIL EROSION AND SEDIMENT CONTROL

U.S. DEPARTMENT OF AGRICULTURE NATURAL RESOURCES CONSERVATION SERVICE	2011	MARYLAND DEPARTMENT OF ENVIRONMENT WATER MANAGEMENT ADMINISTRATION

DETAIL E-1 SILT FENCE

STANDARD SYMBOL —SF—

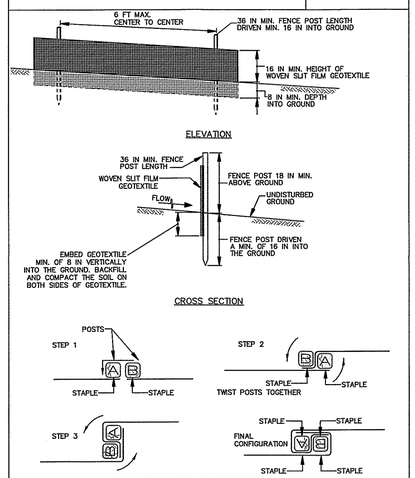

1 OF 2

MARYLAND STANDARDS AND SPECIFICATIONS FOR SOIL EROSION AND SEDIMENT CONTROL

U.S. DEPARTMENT OF AGRICULTURE NATURAL RESOURCES CONSERVATION SERVICE	2011	MARYLAND DEPARTMENT OF ENVIRONMENT WATER MANAGEMENT ADMINISTRATION

DETAIL E-1 SILT FENCE

STANDARD SYMBOL —SF—

CONSTRUCTION SPECIFICATIONS

1. USE WOOD POSTS 1¾ X 1¾ ± ⅛ INCH (MINIMUM) SQUARE CUT OF SOUND QUALITY HARDWOOD. AS AN ALTERNATIVE TO WOODEN POST USE STANDARD "T" OR "U" SECTION STEEL POSTS WEIGHING NOT LESS THAN 1 POUND PER LINEAR FOOT.
2. USE 36 INCH MINIMUM POSTS DRIVEN 16 INCH MINIMUM INTO GROUND NO MORE THAN 6 FEET APART.
3. USE WOVEN SLIT FILM GEOTEXTILE AS SPECIFIED IN SECTION H-1 MATERIALS AND FASTEN GEOTEXTILE SECURELY TO UPSLOPE SIDE OF FENCE POSTS WITH WIRE TIES OR STAPLES AT TOP AND MID-SECTION.
4. PROVIDE MANUFACTURER CERTIFICATION TO THE AUTHORIZED REPRESENTATIVE OF THE INSPECTION/ENFORCEMENT AUTHORITY SHOWING THAT THE GEOTEXTILE USED MEETS THE REQUIREMENTS IN SECTION H-1 MATERIALS.
5. EMBED GEOTEXTILE A MINIMUM OF 8 INCHES VERTICALLY INTO THE GROUND. BACKFILL AND COMPACT THE SOIL ON BOTH SIDES OF FABRIC.
6. WHERE TWO SECTIONS OF GEOTEXTILE ADJOIN: OVERLAP, TWIST, AND STAPLE TO POST IN ACCORDANCE WITH THIS DETAIL.
7. EXTEND BOTH ENDS OF THE SILT FENCE A MINIMUM OF FIVE HORIZONTAL FEET UPSLOPE AT 45 DEGREES TO THE MAIN FENCE ALIGNMENT TO PREVENT RUNOFF FROM GOING AROUND THE ENDS OF THE SILT FENCE.
8. REMOVE ACCUMULATED SEDIMENT AND DEBRIS WHEN BULGES DEVELOP IN SILT FENCE OR WHEN SEDIMENT REACHES 25% OF FENCE HEIGHT. REPLACE GEOTEXTILE IF TORN. IF UNDERMINING OCCURS, REINSTALL FENCE.

2 OF 2

MARYLAND STANDARDS AND SPECIFICATIONS FOR SOIL EROSION AND SEDIMENT CONTROL

U.S. DEPARTMENT OF AGRICULTURE NATURAL RESOURCES CONSERVATION SERVICE	2011	MARYLAND DEPARTMENT OF ENVIRONMENT WATER MANAGEMENT ADMINISTRATION

DETAIL E-3 SUPER SILT FENCE

STANDARD SYMBOL —SSF—

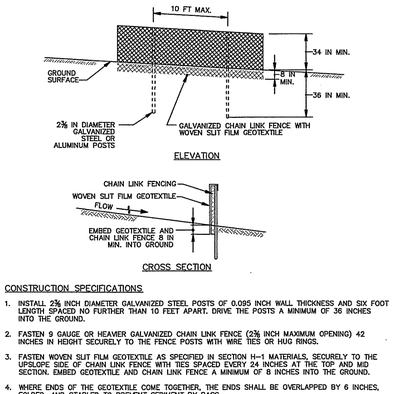

CONSTRUCTION SPECIFICATIONS

1. INSTALL 2⅜ INCH DIAMETER GALVANIZED STEEL POSTS OF 0.095 INCH WALL THICKNESS AND SIX FOOT LENGTH SPACED NO FURTHER THAN 10 FEET APART. DRIVE THE POSTS A MINIMUM OF 36 INCHES INTO THE GROUND.
2. FASTEN 9 GAUGE OR HEAVIER GALVANIZED CHAIN LINK FENCE (2⅜ INCH MAXIMUM OPENING) 42 INCHES IN HEIGHT SECURELY TO THE FENCE POSTS WITH WIRE TIES OR HUG RINGS.
3. FASTEN WOVEN SLIT FILM GEOTEXTILE AS SPECIFIED IN SECTION H-1 MATERIALS, SECURELY TO THE UPSLOPE SIDE OF CHAIN LINK FENCE WITH TIES SPACED EVERY 24 INCHES AT THE TOP AND MID SECTION. EMBED GEOTEXTILE AND CHAIN LINK FENCE A MINIMUM OF 8 INCHES INTO THE GROUND.
4. WHERE ENDS OF THE GEOTEXTILE COME TOGETHER, THE ENDS SHALL BE OVERLAPPED BY 6 INCHES, FOLDED, AND STAPLED TO PREVENT SEDIMENT BY PASS.
5. EXTEND BOTH ENDS OF THE SUPER SILT FENCE A MINIMUM OF FIVE HORIZONTAL FEET UPSLOPE AT 45 DEGREES TO THE MAIN FENCE ALIGNMENT TO PREVENT RUNOFF FROM GOING AROUND THE ENDS OF THE SUPER SILT FENCE.
6. PROVIDE MANUFACTURER CERTIFICATION TO THE INSPECTION/ENFORCEMENT AUTHORITY SHOWING THAT GEOTEXTILE USED MEETS THE REQUIREMENTS IN SECTION H-1 MATERIALS.
7. REMOVE ACCUMULATED SEDIMENT AND DEBRIS WHEN BULGES DEVELOP IN FENCE OR WHEN SEDIMENT REACHES 25% OF FENCE HEIGHT. REPLACE GEOTEXTILE IF TORN. IF UNDERMINING OCCURS, REINSTALL CHAIN LINK FENCING AND GEOTEXTILE.

MARYLAND STANDARDS AND SPECIFICATIONS FOR SOIL EROSION AND SEDIMENT CONTROL

U.S. DEPARTMENT OF AGRICULTURE NATURAL RESOURCES CONSERVATION SERVICE	2011	MARYLAND DEPARTMENT OF ENVIRONMENT WATER MANAGEMENT ADMINISTRATION

DETAIL E-9-3 CURB INLET PROTECTION

STANDARD SYMBOL CIP

MAXIMUM DRAINAGE AREA = ½ ACRE

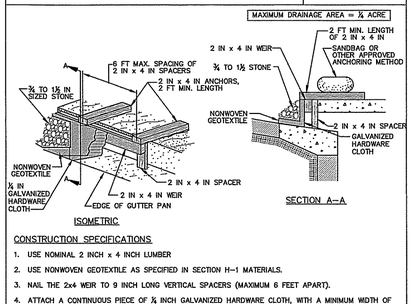

CONSTRUCTION SPECIFICATIONS

1. USE NOMINAL 2 INCH x 4 INCH LUMBER
2. USE NONWOVEN GEOTEXTILE AS SPECIFIED IN SECTION H-1 MATERIALS.
3. NAIL THE 2x4 WEIR TO 9 INCH LONG VERTICAL SPACERS (MAXIMUM 6 FEET APART).
4. ATTACH A CONTINUOUS PIECE OF ½ INCH GALVANIZED HARDWARE CLOTH, WITH A MINIMUM WIDTH OF 30 INCHES AND A MINIMUM LENGTH OF 4 FEET LONGER THAN THE THROAT OPENING, TO THE 2x4 WEIR, EXTENDING IT 2 FEET BEYOND THROAT ON EACH SIDE.
5. PLACE A CONTINUOUS PIECE OF NONWOVEN GEOTEXTILE OF THE SAME DIMENSIONS AS THE HARDWARE CLOTH OVER THE HARDWARE CLOTH AND SECURELY ATTACH TO THE 2x4 WEIR.
6. PLACE THE ASSEMBLY AGAINST THE INLET THROAT AND NAIL TO 2x4 ANCHORS (MINIMUM 2 FEET LENGTH). EXTEND THE ANCHORS ACROSS THE INLET TOP AND HOLD IN PLACE BY SANDBAGS OR OTHER APPROVED ANCHORING METHOD.
7. INSTALL END SPACERS A MINIMUM OF 1 FOOT BEYOND THE ENDS OF THE THROAT OPENING.
8. FORM THE HARDWARE CLOTH AND THE GEOTEXTILE TO THE CONCRETE GUTTER AND FACE OF CURB TO SPAN THE INLET OPENING. COVER THE HARDWARE CLOTH AND GEOTEXTILE WITH CLEAN ¾ TO 1½ INCH STONE OR EQUIVALENT RECYCLED CONCRETE.
9. AT NON-SUMP LOCATIONS, INSTALL A TEMPORARY SANDBAG OR ASPHALT BERM TO PREVENT INLET BYPASS.
10. STORM DRAIN INLET PROTECTION REQUIRES FREQUENT MAINTENANCE. REMOVE ACCUMULATED SEDIMENT AFTER EACH RAIN EVENT TO MAINTAIN FUNCTION AND AVOID PREMATURE CLOGGING. IF INLET PROTECTION DOES NOT COMPLETELY DRAIN WITHIN 24 HOURS AFTER A STORM EVENT, IT IS CLOGGED. WHEN THIS OCCURS, REMOVE ACCUMULATED SEDIMENT AND CLEAN, OR REPLACE GEOTEXTILE AND STONE.

MARYLAND STANDARDS AND SPECIFICATIONS FOR SOIL EROSION AND SEDIMENT CONTROL

U.S. DEPARTMENT OF AGRICULTURE NATURAL RESOURCES CONSERVATION SERVICE	2011	MARYLAND DEPARTMENT OF ENVIRONMENT WATER MANAGEMENT ADMINISTRATION

DETAIL E-6 FILTER LOG

STANDARD SYMBOL —FL-18—

DESIGNATION FL-18 REFERS TO 18 INCH DIAMETER FILTER LOG.

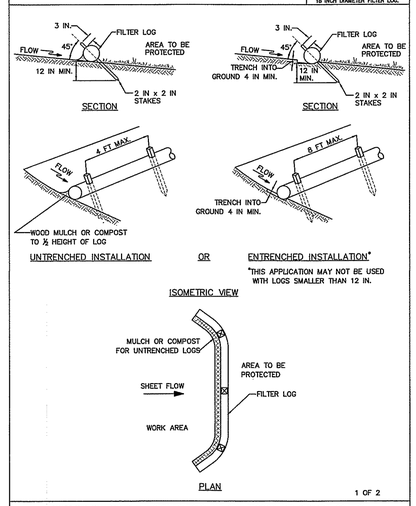

1 OF 2

MARYLAND STANDARDS AND SPECIFICATIONS FOR SOIL EROSION AND SEDIMENT CONTROL

U.S. DEPARTMENT OF AGRICULTURE NATURAL RESOURCES CONSERVATION SERVICE	2011	MARYLAND DEPARTMENT OF ENVIRONMENT WATER MANAGEMENT ADMINISTRATION

DETAIL E-6 FILTER LOG

STANDARD SYMBOL —FL-18—

DESIGNATION FL-18 REFERS TO 18 INCH DIAMETER FILTER LOG.

CONSTRUCTION SPECIFICATIONS

1. PRIOR TO INSTALLATION, CLEAR ALL OBSTRUCTIONS INCLUDING ROCKS, CLODS, AND DEBRIS GREATER THAN ONE INCH THAT MAY INTERFERE WITH PROPER FUNCTION OF FILTER LOG.
2. FILL LOG NETTING UNIFORMLY WITH COMPOST (IN ACCORDANCE WITH SECTION H-1 MATERIALS), OR OTHER APPROVED BIODEGRADABLE MATERIAL TO DESIRED LENGTH SUCH THAT LOGS DO NOT DEFORM.
3. INSTALL FILTER LOGS PERPENDICULAR TO THE FLOW DIRECTION AND PARALLEL TO THE SLOPE WITH THE BEGINNING AND END OF THE INSTALLATION POINTING SLIGHTLY UP THE SLOPE CREATING A "J" SHAPE AT EACH END TO PREVENT BYPASS.
4. FOR UNTRENCHED INSTALLATION BLOW OR HAND PLACE MULCH OR COMPOST ON UPHILL SIDE OF THE SLOPE ALONG LOG.
5. STAKE FILTER LOG EVERY 4 FEET OR CLOSER ALONG ENTIRE LENGTH OF LOG OR TRENCH LOG INTO GROUND A MINIMUM OF 4 INCHES AND STAKE LOG EVERY 8 FEET OR CLOSER.
6. USE STAKES WITH A MINIMUM NOMINAL CROSS SECTION OF 2X2 INCH AND OF SUFFICIENT LENGTH TO ATTAIN A MINIMUM OF 12 INCHES INTO THE GROUND AND 3 INCHES PROTRUDING ABOVE LOG.
7. WHEN MORE THAN ONE LOG IS NEEDED, OVERLAP ENDS 12 INCHES MINIMUM AND STAKE.
8. REMOVE SEDIMENT WHEN IT HAS ACCUMULATED TO A DEPTH OF ½ THE EXPOSED HEIGHT OF LOG AND REPLACE MULCH. REPLACE FILTER LOG IF TORN. REINSTALL FILTER LOG IF UNDERMINING OR DISLODGING OCCURS. REPLACE CLOGGED FILTER LOGS. FOR PERMANENT APPLICATIONS, ESTABLISH AND CONTINUOUSLY MEET REQUIREMENTS FOR ADEQUATE VEGETATIVE ESTABLISHMENT IN ACCORDANCE WITH SECTION B-4 VEGETATIVE STABILIZATION.

2 OF 2

MARYLAND STANDARDS AND SPECIFICATIONS FOR SOIL EROSION AND SEDIMENT CONTROL

U.S. DEPARTMENT OF AGRICULTURE NATURAL RESOURCES CONSERVATION SERVICE	2011	MARYLAND DEPARTMENT OF ENVIRONMENT WATER MANAGEMENT ADMINISTRATION

DETAIL B-4-6-A TEMPORARY SOIL STABILIZATION MATTING CHANNEL APPLICATION

STANDARD SYMBOL TSSMC – * lb/ft² (* INCLUDE SHEAR STRESS)

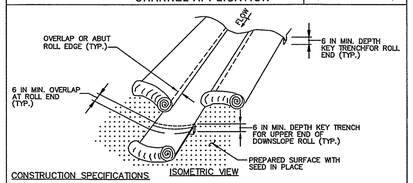

CONSTRUCTION SPECIFICATIONS

1. USE MATTING THAT HAS A DESIGN VALUE FOR SHEAR STRESS EQUAL TO OR HIGHER THAN THE SHEAR STRESS DESIGNATED ON APPROVED PLANS.
2. USE TEMPORARY SOIL STABILIZATION MATTING MADE OF DEGRADABLE (LASTS 6 MONTHS MINIMUM) NATURAL OR MAN-MADE FIBERS (MOSTLY ORGANIC). MAT MUST HAVE UNIFORM THICKNESS AND DISTRIBUTION OF FIBERS THROUGHOUT AND BE SMOLDER RESISTANT. CHEMICALS USED IN THE MAT MUST BE NON-LEACHING AND NON-TOXIC TO VEGETATION AND SEED GERMINATION AND NON-INJURIOUS TO THE SKIN. IF PRESENT, NETTING MUST BE EXTRUDED PLASTIC WITH A MAXIMUM MESH OPENING OF 2x2 INCHES AND SUFFICIENTLY BONDED OR SEWN ON 2 INCH CENTERS ALONG LONGITUDINAL AXIS OF THE MATERIAL TO PREVENT SEPARATION OF THE NET FROM THE PARENT MATERIAL.
3. SECURE MATTING USING STEEL STAPLES, WOOD STAKES, OR BIODEGRADABLE EQUIVALENT. STAPLES MUST BE "U" OR "T" SHAPED STEEL WIRE HAVING A MINIMUM GAUGE OF NO. 11 AND NO. 8 RESPECTIVELY. "U" SHAPED STAPLES MUST AVERAGE 1 TO 1½ INCHES WIDE AND BE A MINIMUM OF 6 INCHES LONG. "T" SHAPED STAPLES MUST HAVE A MINIMUM 8 INCH MAIN LEG, A MINIMUM 1 INCH SECONDARY LEG, AND A MINIMUM 4 INCH HEAD. WOOD STAKES MUST BE ROUGH-SAWN HARDWOOD, 12 TO 24 INCHES IN LENGTH, 1x3 INCH IN CROSS SECTION, AND WEDGE SHAPED AT THE BOTTOM.
4. PERFORM FINAL GRADING, TOPSOIL APPLICATION, SEEDBED PREPARATION, AND PERMANENT SEEDING IN ACCORDANCE WITH SPECIFICATIONS. PLACE MATTING WITHIN 48 HOURS OF COMPLETING SEEDING OPERATIONS UNLESS END OF WORKDAY STABILIZATION IS SPECIFIED ON THE APPROVED EROSION AND SEDIMENT CONTROL PLAN.
5. UNROLL MATTING IN DIRECTION OF WATER FLOW, CENTERING THE FIRST ROLL ON THE CHANNEL CENTERLINE. WORK FROM CENTER OF CHANNEL OUTWARD WHEN PLACING ROLLS. LAY MAT SMOOTHLY AND FIRMLY ON THE SEEDED SURFACE. AVOID STRETCHING THE MATTING.
6. KEY-IN UPSTREAM END OF EACH MAT ROLL BY DIGGING A 6 INCH (MINIMUM) TRENCH AT THE UPSTREAM END OF THE MATTING, PLACING THE ROLL END IN THE TRENCH, STAPLING THE MAT IN PLACE, REPLACING THE EXCAVATED MATERIAL, AND TAMPING TO SECURE THE MAT END.
7. OVERLAP OR ABUT THE ROLL EDGES PER MANUFACTURER RECOMMENDATIONS. OVERLAP ROLL ENDS BY 6 INCHES (MINIMUM), WITH THE UPSTREAM MAT OVERLAPPING ON TOP OF THE NEXT DOWNSTREAM MAT.
8. STAPLE/STAKE MAT IN A STAGGERED PATTERN ON 4 FOOT (MAXIMUM) CENTERS THROUGHOUT AND 2 FOOT (MAXIMUM) CENTERS ALONG SEAMS, JOINTS, AND ROLL ENDS.
9. ESTABLISH AND MAINTAIN VEGETATION SO THAT REQUIREMENTS FOR ADEQUATE VEGETATIVE ESTABLISHMENT ARE CONTINUOUSLY MET IN ACCORDANCE WITH SECTION B-4 VEGETATIVE STABILIZATION.

MARYLAND STANDARDS AND SPECIFICATIONS FOR SOIL EROSION AND SEDIMENT CONTROL

U.S. DEPARTMENT OF AGRICULTURE NATURAL RESOURCES CONSERVATION SERVICE	2011	MARYLAND DEPARTMENT OF ENVIRONMENT WATER MANAGEMENT ADMINISTRATION

ENGINEER DESIGN CERTIFICATION

I HEREBY CERTIFY THIS PLAN FOR SOIL EROSION AND SEDIMENT CONTROL HAS BEEN DESIGNED IN ACCORDANCE WITH LOCAL ORDINANCES, COMAR 26.17.01, 26.17.02 AND THE 2011 MARYLAND STANDARDS AND SPECIFICATIONS FOR SOIL EROSION AND SEDIMENT CONTROL.

JOSEPH H. CECI — REG. NO. 30709 — DATE 3/22/21

FREDERICK SOIL CONSERVATION DISTRICT SOIL EROSION AND SEDIMENT CONTROL PLAN APPROVAL

By: _____

Date: _____

SCD APPROVAL FOR SEDIMENT AND EROSION CONTROL IS CONTINGENT UPON ISSUANCE OF ALL APPLICABLE REGULATORY PERMITS.

(PLAN IS VALID FOR TWO YEARS FROM DATE OF APPROVAL)

OWNERS / DEVELOPERS CERTIFICATION

I/WE HEREBY CERTIFY THAT ANY CLEARING, GRADING, CONSTRUCTION AND/OR DEVELOPMENT WILL BE DONE PURSUANT TO THIS PLAN AND THAT ANY RESPONSIBLE PERSONNEL INVOLVED IN THE CONSTRUCTION PROJECT WILL HAVE A CERTIFICATE OF ATTENDANCE AT A DEPARTMENT OF THE ENVIRONMENT APPROVED TRAINING PROGRAM FOR THE CONTROL OF SEDIMENT AND EROSION BEFORE BEGINNING THE PROJECT.

OWNER / DEVELOPER _____ DATE _____

FOX & ASSOCIATES INC. Est. 1966

FOX & ASSOCIATES, INC.
ENGINEERS • SURVEYORS • PLANNERS
981 MT. AETNA ROAD
HAGERSTOWN, MD. 21740
PHONE: (301)733-8503
or (301)416-7250
FAX: (301)733-1853
82 WORMANS MILL COURT
SUITE 'G'
FREDERICK, MD. 21701
PHONE: (301)663-8660
FAX: (301)293-8609
WWW.FOXASSOCIATESINC.COM Email: FOXFREDERICK@FOXASSOCIATESINC.COM

DATE	REVISION	DRAWN BY
11/2020	REVISED PER TOWN OF EMMITSBURG COMMENTS	

SEDIMENT CONTROL NOTES AND DETAILS

IRISHTOWN ROAD

SITUATED ON THE WEST SIDE OF IRISHTOWN ROAD
TOWN OF EMMITSBURG, ELECTION DISTRICT No. 5
FREDERICK COUNTY, MARYLAND

SCALE: AS SHOWN

PROFESSIONAL CERTIFICATION

STATE OF MARYLAND — JOSEPH H. CECI — REG. NO. 30709 — PROFESSIONAL ENGINEER

3/22/21

I HEREBY CERTIFY THAT THESE DOCUMENTS WERE PREPARED OR APPROVED BY ME, AND THAT I AM A DULY LICENSED PROFESSIONAL ENGINEER UNDER THE LAWS OF THE STATE OF MARYLAND.

LICENSE No.: 30709 EXP. DATE: 7/23/22

PROJECT NO. 18-50891
DRAWING NO. D - 3501
DATE: AUGUST 2020
DRAWN BY: JWE
CHECKED BY: JEM

SHEET 14 OF 15

LEGEND

- EXISTING TREE CANOPY
- EXISTING TREE CANOPY
- PROPOSED TREE
- INTERSECTION SIGHT TRIANGLES
- CLEAR SIGHT TRIANGLES

Street Tree Plant List					
Key	Qty.	Botanical Name	Common Name	Size	Condition
PA	30	Platanus x acerifolia 'Bloodgood'	London sycamore	2-1/2" cal. Min.	B&B
AR	8	Acer rubrum 'October Glory'	Red Maple	2-1/2" cal. Min.	B&B

* ONLY COTTONLESS MALE LONDON SYCAMORE TREES SHALL BE PERMITTED IN ACCORDANCE WITH TOWN OF EMMITSBURG CODE. FEMALE LONDON SYCAMORE TREES ARE PROHIBITED.

Landscape Notes

1. The landscape contractor shall verify the quantities of plant material shown on the plan and shall provide and plant all material in accordance with the plan.
2. Plant material shall conform to the current issue of the American Standard for Nursery Stock published by the American Association of Nurserymen.
3. Plant material and lawn seeding and sodding shall be installed in accordance with the "Landscape Specification Guidelines" by the Landscape Contractors Association of Maryland, the District of Columbia and Virginia (latest edition).
4. The landscape contractor shall notify Miss Utility to verify the location of utilities in the field before proceeding with the installation.
5. All plants six feet in height and taller are to be staked as noted in the "Landscape Specification Guidelines" and the staking detail on this plan.
6. Planting areas are to have a minimum 18" depth of clean soil for the entire area of the planting. Clean soil must include existing on-site soil, but must be free of chemical substances and debris over 1½" diameter. The top 4 inches of the soil shall be topsoil meeting the criteria of the "Landscape Specification Guidelines".
7. The plants are to be planted into prepared planting beds. A 2" layer of organic material, as defined in the "Landscape Specification Guidelines", shall be thoroughly cultivated into the bed area. The backfill mixture for trees and shrubs shall be ¾ existing soil mixed with ¼ organic material, plus granular fertilizer or compost.
8. The edge of the mulch bed shall be formed as a 2" to 3" deep "V" trench to separate the mulch bed from the grass lawn area. The trench shall form a smooth, continuous curve, as shown on the Landscape Plan. The "V" trench shall be maintained, as necessary, to prevent the encroachment of grass into the bed.
9. After planting, the entire bed is to receive 2" to 3" of mulch. Mulch shall be composted, shredded, hardwood bark mulch, dark brown in color.
10. The landscape contractor shall use a pre-emergent, soil applied, herbicide on the mulched bed areas. Apply the pre-emergent herbicide only when all foliage is dry to prevent foliar burn and in accordance with the manufacturer's recommendations.
11. All trees that are not in designated planter beds shall receive a 4'-5' diameter mulch bed around the trunk with 2" to 3" of dark, shredded, hardwood bark mulch. There shall be no excess soil or mulch on top of the root ball so as to expose the basal root flare.
12. All disturbed lawn areas are to be seeded with a permanent Maryland State Certified seed mix or sodded with Maryland State Certified Turfgrass Sod per the owner's discretion. Prepare the subgrade and finish grade soil, supply, install and maintain the seed or sod in accordance with the "Landscape Specification Guidelines".
13. The landscaping is to be maintained with living plant material. The warranty is for a (1) one year period, excluding bulbs and annuals, commencing on the date of initial acceptance. All plants shall be alive and in satisfactory growth at the end of the guarantee period. Any material that is 25% dead or more shall be considered dead and must be replaced at no charge. A tree shall be considered dead when the main leader has died back, or 25% of the crown is dead. The warranty may be void if proper care, by the owner or the owner's maintenance contractor, is not provided.

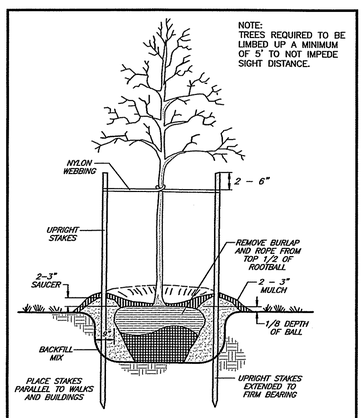

TREE PLANTING DETAIL

NOT TO SCALE

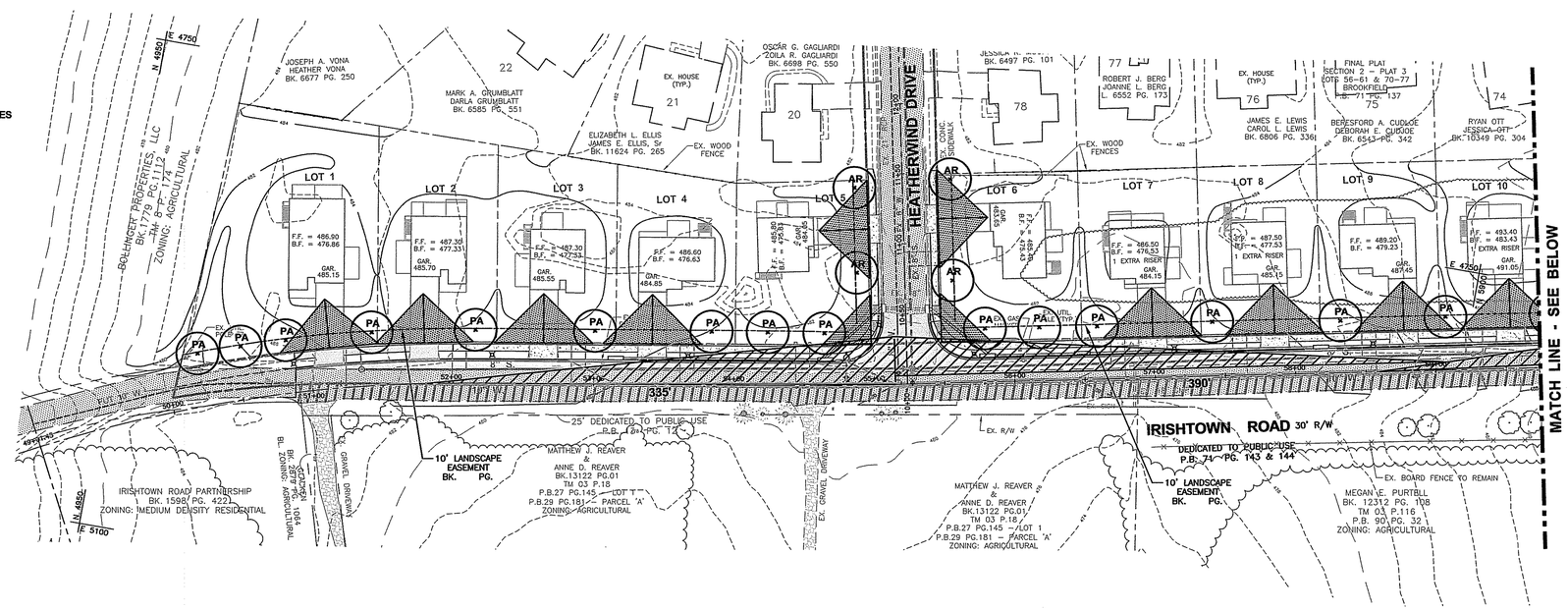

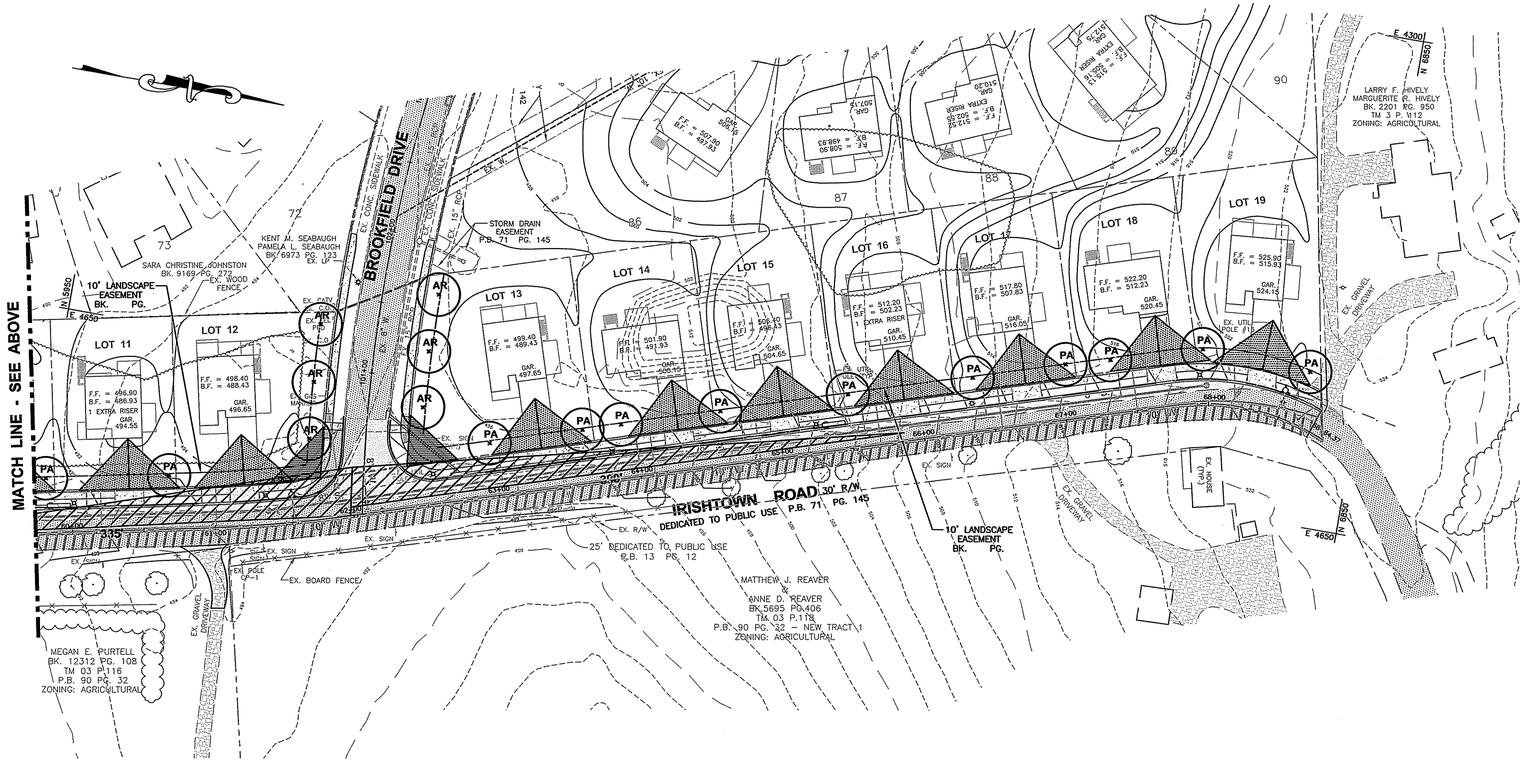

FOX & ASSOCIATES INC.
Est. 1966

FOX & ASSOCIATES, INC.
ENGINEERS • SURVEYORS • PLANNERS
981 MT. AETNA ROAD
HAGERSTOWN, MD. 21740
PHONE: (301)739-8603
FAX: (301)733-1853
82 WORMANS MILL COURT
SUITE E
FREDERICK, MD. 21701
PHONE: (301)695-0880
FAX: (301)293-0009
WWW.FOXASSOCIATESINC.COM Email: FOXFREDERICK@FOXASSOCIATESINC.COM

DATE	REVISION	DRAWN BY
11/2020	REVISED PER TOWN OF EMMITSBURG COMMENTS	

LANDSCAPE PLAN

IRISHTOWN ROAD

SITUATED ON THE WEST SIDE OF IRISHTOWN ROAD
TOWN OF EMMITSBURG, ELECTION DISTRICT No. 5
FREDERICK COUNTY, MARYLAND

SCALE: 1" = 50'

STATE OF MARYLAND MARY PATTON No. 128 LANDSCAPE ARCHITECT

PROJECT NO.	18-50891
DRAWING NO.	D - 3501
DATE:	AUGUST 2020
DRAWN BY:	JWE
CHECKED BY:	JEM

SHEET 15 OF 15

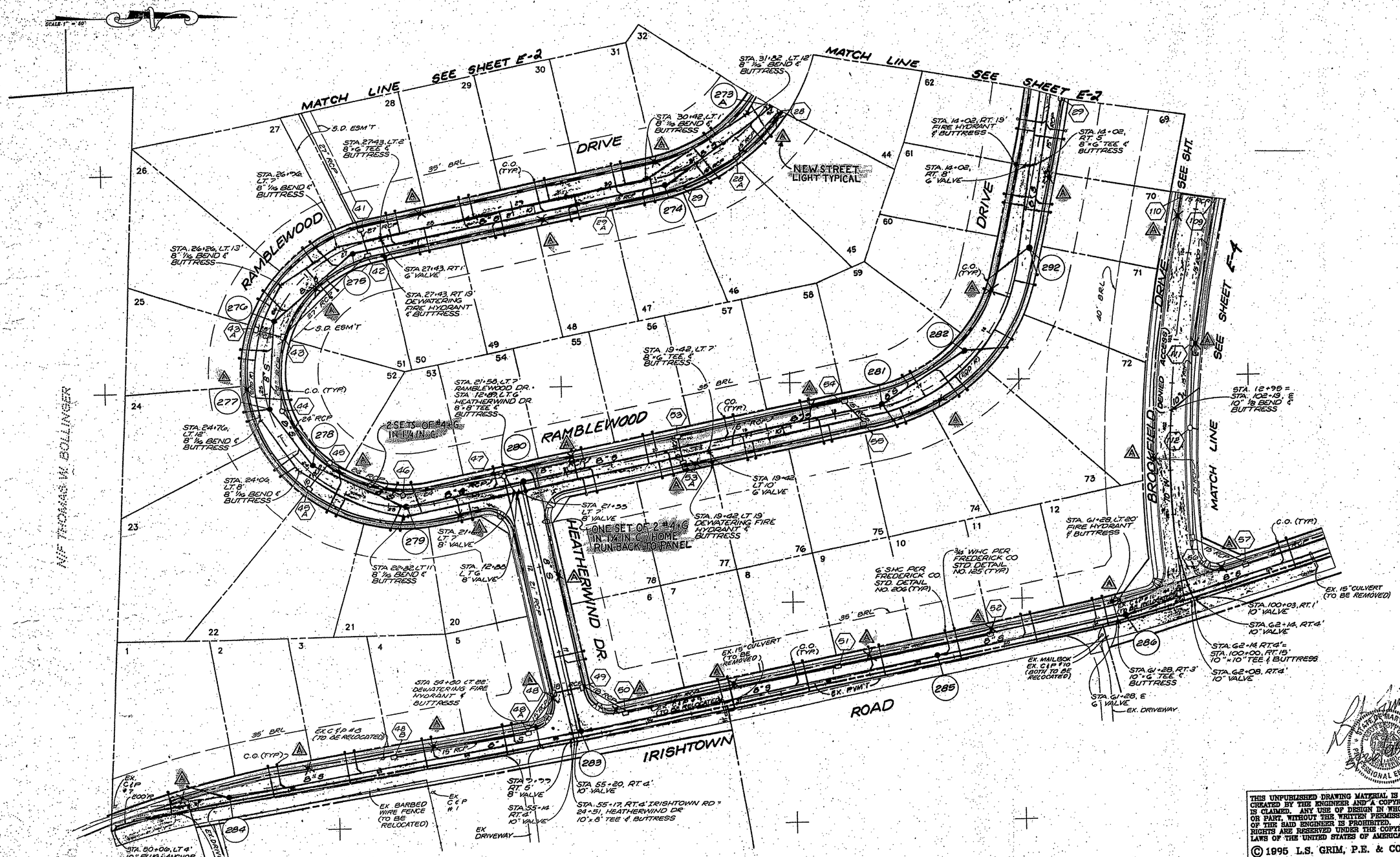

FILE: 9540

L.S. Grim, P.E. & Co.
CONSULTING ENGINEERS
41 Summit Avenue, Hagerstown, Maryland 21740
(301) 797-1702 FAX (301) 416-8071

GENERAL NOTES:

1. IF THIS PROJECT IS A RENOVATION TO AN EXISTING FACILITY, NOT ALL EXISTING MECH. & ELECT. ITEMS HAVE BEEN NOTED, THE CONTRACTOR SHALL VISIT THE SITE PRIOR TO BIDDING AND NOTE ANY EXISTING ITEMS OR CONDITNS. WHICH MAY AFFECT THE BID PRICE. ALSO THE CONTRACTOR IS ADVISED THAT LEAD BASED PAINTS MAY BE PRESENT. THE CONTRACTOR SHALL TAKE ALL NECESSARY PRECAUTIONS REQ'D TO ACCOMMODATE THE POTENT'L LEAD PAINT HAZARD.
2. THE DRAWING INTENT IS TO INDICATE GENERAL ARRANGEMENT, DESIGN AND INTENT OF WORK IS PARTLY DIAGRAMATIC. IT SHALL NOT BE SCALED FOR ROUGH-IN MEASUREMENTS OR SERVE AS AN ERECTION-SHOP DRAWING.
3. CONTRACTOR IS RESPONSIBLE FOR VERIFICATION OF ALL DIMENSIONS.
4. THE CONTRACTOR SHALL PROVIDE ALL ITEMS AS MAY BE REQUIRED FOR A COMPLETE INSTALLATION, READY FOR CONTINUOUS USE.

Brookfield Subdivision
Street Lighting

ELECTRICAL PLAN

DRAWN BY: JMT

CHECKED BY: LSG

DRAWING NUMBER: E-3

OF 5 SHEETS

DATE: MAY 26 1995

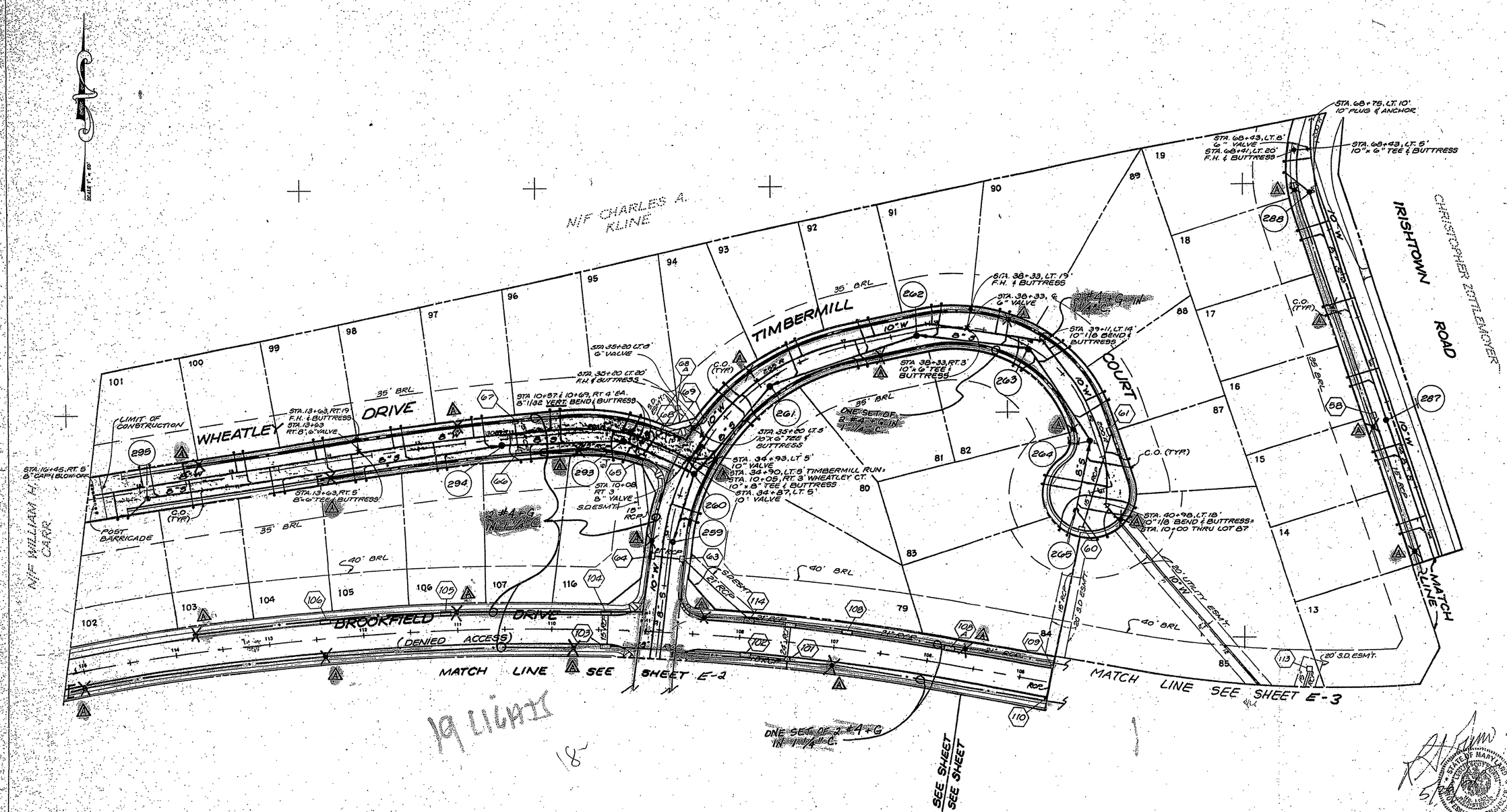

FILE: 9540

L.S. Grim, P.E. & Co.
CONSULTING ENGINEERS
41 Summit Avenue, Hagerstown Maryland 21740
(301) 797-1702 FAX (301) 416-8071

GENERAL NOTES:

1. IF THIS PROJECT IS A RENOVATION TO AN EXISTING FACILITY, NOT ALL EXISTING MECH. & ELECT. ITEMS HAVE BEEN NOTED. THE CONTRACTOR SHALL VISIT THE SITE PRIOR TO BIDDING AND NOTE ANY EXISTING ITEMS OR CONDITNS. WHICH MAY AFFECT THE BID PRICE. ALSO THE CONTRACTOR IS ADVISED THAT LEAD BASED PAINTS MAY BE PRESENT. THE CONTRACTOR SHALL TAKE ALL NECESSARY PRECAUTIONS REQ'D TO ACCOMMODATE THE POTENT'L LEAD PAINT HAZARD.
2. THE DRAWING INTENT IS TO INDICATE GENERAL ARRANGEMENT, DESIGN AND INTENT OF WORK IS PARTLY DIAGRAMMATIC. IT SHALL NOT BE SCALED FOR ROUGH-IN MEASUREMENTS OR SERVE AS AN ERECTION SHOP DRAWING.
3. CONTRACTOR IS RESPONSIBLE FOR VERIFICATION OF ALL DIMENSIONS.
4. THE CONTRACTOR SHALL PROVIDE ALL ITEMS, AS MAY BE REQUIRED FOR A COMPLETE INSTALLATION, READY FOR CONTINUOUS USE.

Brookfield Subdivision

Lighting

DRAWN BY JMT

CHECKED LSG

DRAWING N E-

OF 5 S

DATE: MAY 2

19 LIGHT

18

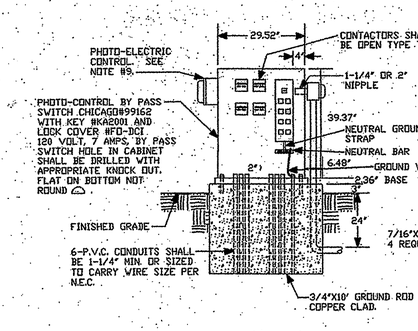

FRONT

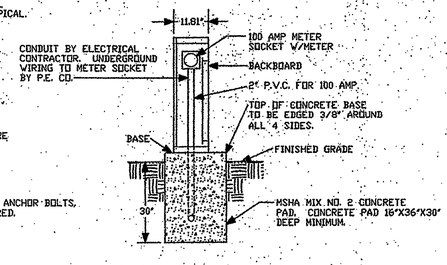

RIGHT SIDE

STREET LIGHTING NOTES

1. ROADWAY CONDUIT CROSSINGS SHALL BE 30" BELOW FINISHED GRADE.
2. DRIVEWAY CONDUIT AND SIDEWALK CONDUIT CROSSINGS SHALL BE 24" BELOW FINISHED GRADE.
3. A #4 COPPER STRANDED GROUND CONDUCTOR SHALL BE PULLED FROM MAIN SERVICE PANEL TO EACH STREET LIGHT POLE HANDHOLE WHERE IT SHALL BE TERMINATED WITH A 3-WAY COMPRESSION CONNECTOR OR COPPER BUG. THE TAP OFF OF THE COMPRESSION CONNECTOR OR BUG SHALL BE BONDED TO POLE WITH A COPPER LUG.
4. WIRING FROM FUSE HOLDER TO FIXTURE SHALL BE 14/3 SEO CABLE. A 1/4" THREADED GROUND STUD SHALL BE WELDED TO POLE BASE.
5. CONDUCTORS SHALL BE FUSED WITH FUSE HOLDER AND BAF 5 AMP FOR EACH INDIVIDUAL FIXTURE. BUSS #HEB-JK AND/OR JJ.
6. POLE TO BE HADCO 15-10 VICTORIAN (POLE ONLY). HEAD ASSEMBLY TO BE HADCO #VS731AT3NUG WITH MULTITAP BALLASTS.

NOTES

1. CONTRACTOR SHALL PROVIDE ALL LIGHT FIXTURES, POLES, POLE BASES, WIRE AND CONDUIT, TRENCHING AND BACKFILL, ETC. MEETING CITY STANDARDS, AND AS INDICATED ON THIS DRAWING TO PROVIDE A FULLY OPERABLE SYSTEM.
2. SUCCESSFUL CONTRACTOR SHALL CALL BOTH MISS UTILITY AND CITY OF EMMITSBURG 48 HOURS PRIOR TO ANY EXCAVATION FOR LOCATION OF ALL UTILITIES.
3. ALL CONTRACTORS SHALL PICK UP LATEST EDITION OF CITY OF EMMITSBURG STREET LIGHTING SPECIFICATIONS AN DETAILS BEFORE BIDDING TO FAMILIARIZE THEMSELVES WITH REQUIREMENTS.
4. EACH LIGHT POLE SHALL BE ON DESIGNATED CIRCUIT AN TAGGED WITH A PERMANENT LABEL LOCATED INSIDE HANDHOLE.
5. CONTRACTOR SHALL COORDINATE POLE LOCATIONS WITH SITE UTILITIES AND RESIDENTIAL DRIVEWAYS, PRIOR TO ROUGH-IN.

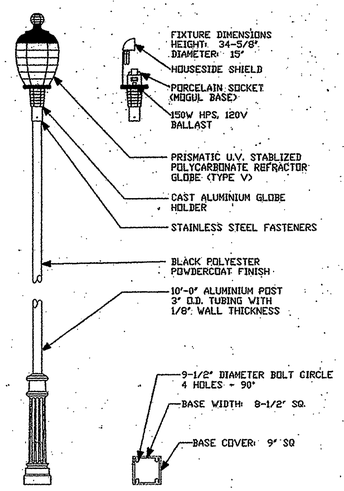

METER/PANEL ENCLOSURE NOTES

1. NEMA 3R SERVICE PANEL CABINET SHALL BE BY CARLON #HL4030 GLASS FIBER REINFORCED POLYESTER HIGH IMPACT WITH STEEL BACKBOARD AND #HLLK CYLINDER LOCK WITH TWO #405 KEYS. CABINET MOUNTING BASE SHALL BE CARLON #HLMB30 SUPPLIED WITH ANCHOR BOLTS AND ALL FASTENING HARDWARE.
2. MAIN BREAKER PANEL SHALL BE INTERIOR ONLY. 100 AMP PANEL SHALL BE CUTLER HAMMER #PB1083FS100INB WITH NEUTRAL BAR.
3. ALL BREAKERS SHALL BE BOLT ON TYPE.
4. EXTERIOR OF CABINET SHALL BE PAINTED WITH TWO COATS OF BENJAMIN MOORE RETARDO BRONZE TONE #163-60 OR APPROVED EQUAL.
5. ALL WIRING SHALL BE PDEN USING TIE WRAPS TO SECURE WIRING IN A WORKMAN LIKE MANNER.
6. ALL BRANCH CIRCUIT CONDUITS SHALL TERMINATE BETWEEN BACK OF CURB AND FRONT OF SIDEWALK (IN GRASS AREA BETWEEN CURB AND SIDEWALK.
7. ALL ITEMS AS INDICATED OR APPROVED EQUAL.
8. ALL PANELS, CONTACTORS, BREAKERS, AND CABINETS SHALL BE SIZED TO MEET CIRCUITRY NEEDS. DRAWINGS REPRESENT MINIMUM TYPICAL.
9. PHOTO-ELECTRIC CONTROL TO BE FISHER PIERCE #633000A2 WITH #2101AFA SOCKET ASSEMBLY. LOCATE PHOTOCONTROL ON NORTH SIDE OF PANEL.
10. ALL BRANCH CIRCUIT CONDUCTORS TO LARGE TO BE INSTALLED TO CIRCUIT BREAKER TERMINALS SHALL HAVE COPPER PIGTAIL ADAPTERS INSTALLED. ILSCO #C.P.M. OR APPROVED EQUAL.

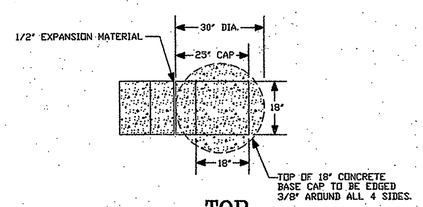

TOP

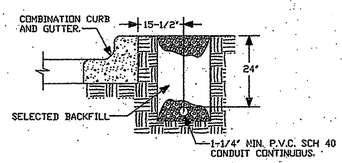

TYPICAL TRENCH DETAIL

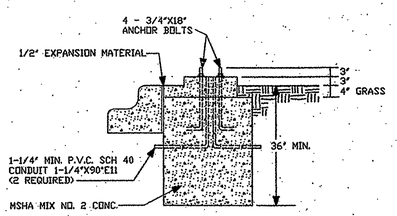

POLE BASE DETAIL

ELECTRICAL LEGEND

A — EMMITSBURG CITY STANDARD RESIDENTIAL STREET LIGHT MOUNTED ON A 10'0" HIGH VICTORIAN POLE. THE FIXTURE SHALL BE HADCO #VS731ATSNUG SERIES, WITH MULTI-TAP BALLASTS.

NEW 100 ANP METER/PANEL ENCLOSURE AND PAD. THE PANEL IS 120/240V, 1PH-3W. PROVIDE A 30 AMP/2 POLE CONTACTOR FOR EACH CIRCUIT.

ELECTRICAL STREET LIGTING UNDERGROUND WIRING IN CONDUIT. SEE DRAWINGS FOR WIRE SIZE AND QUANTITIES. SEE CITY OF EMMITSBURG STANDARDS FOR ADDITIONAL SPECIFICATIONS, AND INSTALLATION DETAILS.

FILE: 9540

L.S.Grim, P.E. & Co.
CONSULTING ENGINEERS
41 Summit Avenue Hagerstown, Maryland 21740
Hagerstown (301) 797-1702 Frederick (301) 416-0071

GENERAL NOTES:

1. IF THIS PROJECT IS A RENOVATION TO AN EXISTING FACILITY, NOT ALL EXISTING MECH & ELECT. ITEMS HAVE BEEN NOTED. THE CONTRACTOR SHALL VISIT THE SITE PRIOR TO BIDDING AND NOTE ANY EXISTING ITEMS OR CONDITIONS WHICH MAY AFFECT THE BID PRICE. ALSO THE CONTRACTOR IS ADVISED THAT LEAD BASED PAINTS MAY BE PRESENT. THE CONTRACTOR SHALL TAKE ALL NECESSARY PRECAUTIONS REQ'D TO ACCOMODATE THE POTENT'L LEAD PAINT HAZARD.
2. THE DRAWING INTENT IS TO INDICATE GENERAL ARRANGEMENT, DESIGN AND INTENT OF WORK IS PARTLY DIAGRAMMATIC. IT SHALL NOT BE SCALED FOR ROUGH-IN MEASUREMENTS OR SERVE AS AN ERECTION SHOP DRAWING.
3. CONTRACTOR IS RESPONSIBLE FOR VERIFICATION OF ALL DIMENSIONS.
4. THE CONTRACTOR SHALL PROVIDE ALL ITEMS AS MAY BE REQUIRED FOR A COMPLETE INSTALLATION, READY FOR CONTINUOUS USE.

Brookfield Subdivision
Street Lighting
SITE LIGHTING DETAILS

DRAWN BY: MJH
CHECKED BY: LSG

DRAWING NUMBER: E-5
OF 5 SHEETS
DATE: MAY 26 1995